2024 PRODUCT CATALOG

TEMPO®

Drainage, Drip Irrigation and Landscape Products

Pricing Effective 5/1/2024

www.tempoinc.com

MADE IN USA

TEMPO®
Powered by Service

Table of Contents

Price List

Channel Drains

2.5” Channel Drain and Fittings	1
4” Channel Drain and Fittings	2

Drainage

Small Round Flat Grates	3
Round Atrium Grates	3
Square Flat Grates	4
Square Atrium Grates	4
Square Universal Grates	4
Large Round Flat Grates	5
Pop-Up Relief Valves	6
Large Round Flat Covers/Lids	6
Round Catch Basins	7
Square Catch Basins	7
Sump Box	8
Low Profile Basins	8
Downspout Adapters	8
Basin Kits	8
Drainage Accessories	9

Valve Boxes

6” Round Valve Boxes	10
10” Round Valve Boxes	10
14” x 19” Standard Valve Boxes	11
17” x 24” Jumbo Valve Boxes	11
14” x 19” Low Profile Valve Boxes/Risers	12
17” x 24” Low Profile Valve Boxes/Risers	12

Drip Irrigation

Down Fan Spray Jet & Assemblies	13
Bent Drip Sticks	14
Multi-Outlet Dripper Assemblies	15
AgriJet™, Assemblies & Accessories	16 - 17
Rhino™ Compensating Emitters	18
Take Apart Compensating Emitters	18
Take Apart Flag Emitters	18
Mini-Inline Emitters	19
8 Outlet Adjustable Bubbler	19
4 Outlet Compensating Bubblers	19
Zebra™ Adjustable Stream Emitters	20
Zebra™ Adjustable Fan Sprayers	20

Price List (Continued)

Zebra™ Adjustable Bubblers	21
Anteater™ Adjustable Jets	21
Adjustable Micro-Sprinkler	21
Cyclone™ (Vortex-style) Emitter	22
Spray Sticks	22
Single Piece Jets	22
Foggers	23
Misters	23
17 mm PC Dripperline w/ Check Valve	24
18 mm PC Dripperline w/ Check Valve	24
1/4" Cobra™ Dripperline	25
1/2” Poly Supply Tubing	26
20 mm and 3/4” Poly Supply Tubing	26
White Poly Tubing	27
Polyethylene Distribution Tubing	28
Vinyl Distribution Tubing	28
Distribution Tubing in Bucket	29
Flex PVC IPS Hose	29
Swing Riser Pipe	29
Micro-Fittings	30
Micro-Fitting Large Packs	31
Micro-Fitting Adapters	31
1/2” Compression Fittings	32 - 34
3/4” Compression Fittings	35 - 36
Quick Lock™ Fittings	37 - 39
17 mm Insert Fittings	40
18 mm Insert Fittings	41
Swivel-Flex™ Swing Joint Fittings	42
Funny Pipe Fittings	42
Swivel-Flex™ Double Swing Joint Assemblies	43
Funny Pipe Single Swing Joint Assemblies	43
Y-Filters	44
Inline Filter	45
Pressure Regulating Filters	45
Y-Filter Replacement Parts	45
Pressure Regulators	46
Drip Zone Kits	46
Full Port High Flow Ball Valves	47 - 48
Dual Line Full Port Flush “Y” Ball Valves	48

TEMPO®
Powered by Service

Table of Contents (Continued)

Price List (Continued)

Dual Line Full Port Starter "Y" Ball Valves	48
Ball Valves	49
Micro-Valves	49
Flow Controlling Valves	50
Riser Leads for Jets	50
Plastic Stakes	51
Wire Stakes	52
Stake Assemblies	53
Poly Rigid Risers	54
1/2" Riser Adapters	54 - 55
Riser Assemblies	55
Bondable Saddles	56
IPS Hose Riser Adapters	57
Spiral Cut Curls	58
Tubing Support Hooks	59
QuickTie™ Vineyard & Orchard Ties	59
QuickClip™ for Trellis Wire	59
Bird Netting C-Clip	59
Poly Cut-Off Riser Nipples	60
PVC Pipe Repair Couplers	61
Tools	61
Figure "8" End Plugs	62
Drip Accessories	62
Micro Packs	63 - 66

Technical Specifications

Channel Drains

2.5" Channel Drains	67 - 68
4" Channel Drains	69 - 70

Drainage

Small Round Grates	71
Large Round Grates	72
Square Grates	73
Round Lids	74
Square Universal Grates	74
Pop-Up Relief Valves	75
Round Catch Basins	76
Square Catch Basins	77
Square Low Profile Basins	78

Technical Specifications (Continued)

Valve Boxes

6" Round Valve Boxes	79
10" Round Valve Boxes	80
14" x 19" Standard Valve Boxes	81
17" x 24" Jumbo Valve Boxes	82
Standard Low Profile Valve Boxes	83
Standard Valve Box Riser Extenders	84
Jumbo Low Profile Valve Boxes	85
Jumbo Valve Box Riser Extender	86

Drip Irrigation

Barbed, Threaded & Dual Headed Foggers	87
Down Fan Spray Jet	88
Bent Drip Stick	88
AgriJet™ Micro-Sprinklers	89
PC Dripperline w/ Check Valve	90
Polyethylene Supply Tubing	90
Flexible PVC IPS Hose	90
Rhino™ Compensating Emitters	91
Take Apart PC Emitters	91
Anteater™ Adjustable Jets	91
Single Piece Jets	91
Take Apart Flag Emitter	91
Cyclone™ (Vortex-style) Emitter	91
Zebra™ Adjustable Stream Emitters	92
Zebra™ Adjustable Fan Sprayers	92
Zebra™ Adjustable Bubblers	92
Spray Sticks	93
Threaded Misters	93
Barbed Elbow Fogger	93
Mini-Inline Emitters	93
4 Outlet Pressure Compensating Bubblers	94
1/4" Cobra™ Dripperline	94
Adjustable Micro-Sprinkler	94
8 Outlet Adjustable Bubbler	94
Polyethylene / Vinyl Distribution Tubing	94

2.5” Channel Drain NEW

Part No.	Description	Color	Part Weight	Box Weight	Box Qty	List Price
CD254C	2.5” Channel Drain (4’ length) w/ Grate	Grey	2.5 lbs	43 lbs	16	$80.00 ea.
CD254S	2.5” Channel Drain (4’ length) w/ Grate	Sand	2.5 lbs	43 lbs	16	$80.00 ea.
CD254B	2.5” Channel Drain (4’ length) w/ Grate	Black	2.5 lbs	43 lbs	16	$80.00 ea.
CD254G	2.5” Channel Drain (4’ length) w/ Grate	Green	2.5 lbs	43 lbs	16	$80.00 ea.
CD258C	2.5” Channel Drain (8’ length) w/ Grate	Grey	5.0 lbs	48 lbs	9	$165.00 ea.
CD258S	2.5” Channel Drain (8’ length) w/ Grate	Sand	5.0 lbs	48 lbs	9	$165.00 ea.
CD258B	2.5” Channel Drain (8’ length) w/ Grate	Black	5.0 lbs	48 lbs	9	$165.00 ea.
CD258G	2.5” Channel Drain (8’ length) w/ Grate	Green	5.0 lbs	48 lbs	9	$165.00 ea.
CG25C	2.5” Slotted Channel Grate (2’ length)	Grey	0.3 lbs	7 lbs	18	$25.00 ea.
CG25S	2.5” Slotted Channel Grate (2’ length)	Sand	0.3 lbs	7 lbs	18	$25.00 ea.
CG25B	2.5” Slotted Channel Grate (2’ length)	Black	0.3 lbs	7 lbs	18	$25.00 ea.
CG25G	2.5” Slotted Channel Grate (2’ length)	Green	0.3 lbs	7 lbs	18	$25.00 ea.

CC25	2.5” Channel Coupling	Black	0.1 lbs	3 lbs	25	$13.00 ea.
CEP25	2.5” Channel End Plug	Black	0.1 lbs	2 lbs	20	$13.00 ea.
CA25	2.5” Channel End Outlet Adapter for 1.5” PVC Pipe	Black	0.1 lbs	2 lbs	10	$15.00 ea.

CKF25C	2.5” Universal Fitting Kit w/ Grate	Grey	0.4 lbs	3 lbs	4	$90.00 ea.
CKF25S	2.5” Universal Fitting Kit w/ Grate	Sand	0.4 lbs	3 lbs	4	$90.00 ea.
CKF25B	2.5” Universal Fitting Kit w/ Grate	Black	0.4 lbs	3 lbs	4	$90.00 ea.
CKF25G	2.5” Universal Fitting Kit w/ Grate	Green	0.4 lbs	3 lbs	4	$90.00 ea.

Each Kit Contains:

x1

x1

x4

x4

x1

x1

4” Channel Drain NEW

Part No.	Description	Color	Part Weight	Box Weight	Box Qty	List Price
CD404C	4” Channel Drain (4’ length) w/ Grate	Grey	4.9 lbs	47 lbs	9	$170.00 ea.
CD404S	4” Channel Drain (4’ length) w/ Grate	Sand	4.9 lbs	47 lbs	9	$170.00 ea.
CD404B	4” Channel Drain (4’ length) w/ Grate	Black	4.9 lbs	47 lbs	9	$170.00 ea.
CD404G	4” Channel Drain (4’ length) w/ Grate	Green	4.9 lbs	47 lbs	9	$170.00 ea.
CD408C	4” Channel Drain (8’ length) w/ Grate	Grey	9.8 lbs	42 lbs	4	$345.00 ea.
CD408S	4” Channel Drain (8’ length) w/ Grate	Sand	9.8 lbs	42 lbs	4	$345.00 ea.
CD408B	4” Channel Drain (8’ length) w/ Grate	Black	9.8 lbs	42 lbs	4	$345.00 ea.
CD408G	4” Channel Drain (8’ length) w/ Grate	Green	9.8 lbs	42 lbs	4	$345.00 ea.
CG40C	4” Slotted Channel Grate (2’ length)	Grey	0.7 lbs	12 lbs	15	$50.00 ea.
CG40S	4” Slotted Channel Grate (2’ length)	Sand	0.7 lbs	12 lbs	15	$50.00 ea.
CG40B	4” Slotted Channel Grate (2’ length)	Black	0.7 lbs	12 lbs	15	$50.00 ea.
CG40G	4” Slotted Channel Grate (2’ length)	Green	0.7 lbs	12 lbs	15	$50.00 ea.

CC40	4” Channel Coupling	Black	0.2 lbs	5 lbs	25	$15.00 ea.
CEP40	4” Channel End Plug	Black	0.2 lbs	4 lbs	20	$15.00 ea.
CA40	4” Channel End Outlet Adapter for 3” S & D Pipe	Black	0.2 lbs	3 lbs	10	$17.50 ea.

CKF40C	4” Universal Fitting Kit w/ Grate	Grey	1.0 lbs	5 lbs	4	$126.00 ea.
CKF40S	4” Universal Fitting Kit w/ Grate	Sand	1.0- lbs	5 lbs	4	$126.00 ea.
CKF40B	4” Universal Fitting Kit w/ Grate	Black	1.0 lbs	5 lbs	4	$126.00 ea.
CKF40G	4” Universal Fitting Kit w/ Grate	Green	1.0 lbs	5 lbs	4	$126.00 ea.

Each Kit Contains:

Small Round Flat Grates

	Part No.	Description	Color	Part Weight	Box Weight	Box Qty	List Price
	G3RFG	3” Round Flat Grate	Green	0.13 lbs	7 lbs	50	$5.60 ea.
	G3RFB	3” Round Flat Grate	Black	0.13 lbs	7 lbs	50	$5.60 ea.
	G3RFS	3” Round Flat Grate	Sand	0.13 lbs	7 lbs	50	$5.85 ea.
	G3RFC	3” Round Flat Grate	Grey	0.13 lbs	7 lbs	50	$5.85 ea.
	G3RFP	3” Round Flat Grate	Purple	0.13 lbs	7 lbs	50	$5.85 ea.
	G4RFG	4” Round Flat Grate	Green	0.18 lbs	10 lbs	50	$6.35 ea.
	G4RFB	4” Round Flat Grate	Black	0.18 lbs	10 lbs	50	$6.35 ea.
	G4RFS	4” Round Flat Grate	Sand	0.18 lbs	10 lbs	50	$6.70 ea.
	G4RFC	4” Round Flat Grate	Grey	0.18 lbs	10 bs	50	$6.70 ea.
	G6RFG	6” Round Flat Grate	Green	0.46 lbs	10 lbs	20	$16.00 ea.
	G6RFB	6” Round Flat Grate	Black	0.46 lbs	10 lbs	20	$16.00 ea.
	G6RFS	6” Round Flat Grate	Sand	0.46 lbs	10 lbs	20	$16.70 ea.
	G6RFC	6” Round Flat Grate	Grey	0.46 lbs	10 bs	20	$16.70 ea.

Small Round Atrium Grates

	Part No.	Description	Color	Part Weight	Box Weight	Box Qty	List Price
	G3RAG	3” Round Atrium Grate	Green	0.15 lbs	5 lbs	25	$12.50 ea.
	G3RAB	3” Round Atrium Grate	Black	0.15 lbs	5 lbs	25	$12.50 ea.
	G3RAS	3” Round Atrium Grate	Sand	0.15 lbs	5 lbs	25	$13.20 ea.
	G4RAG	4” Round Atrium Grate	Green	0.20 lbs	5 lbs	20	$18.65 ea.
	G4RAB	4” Round Atrium Grate	Black	0.20 lbs	5 lbs	20	$18.65 ea.
	G4RAS	4” Round Atrium Grate	Sand	0.20 lbs	5 lbs	20	$19.60 ea.
	G6RAG	6” Round Atrium Grate	Green	0.51 lbs	7 lbs	12	$25.55 ea.
	G6RAB	6” Round Atrium Grate	Black	0.51 lbs	7 lbs	12	$25.55 ea.
	G6RAS	6” Round Atrium Grate	Sand	0.51 lbs	7 lbs	12	$26.65 ea.

Square Flat Grates

	Part No.	Description	Color	Part Weight	Box Weight	Box Qty	List Price
	G9SFG	9” Square Flat Grate	Green	0.90 lbs	10 lbs	10	$48.30 ea.
	G9SFB	9” Square Flat Grate	Black	0.90 lbs	10 lbs	10	$48.30 ea.
	G9SFS	9” Square Flat Grate	Sand	0.90 lbs	10 lbs	10	$50.60 ea.
	G9SFC	9” Square Flat Grate	Grey	0.90 lbs	10 lbs	10	$50.60 ea.
	G12SFG	12” Square Flat Grate	Green	1.70 lbs	18 lbs	10	$69.90 ea.
	G12SFB	12” Square Flat Grate	Black	1.70 lbs	18 lbs	10	$69.90 ea.
	G12SFS	12” Square Flat Grate	Sand	1.70 lbs	18 lbs	10	$73.50 ea.
	G12SFC	12” Square Flat Grate	Grey	1.70 lbs	18 bs	10	$73.50 ea.
	G18SFG	18” Square Flat Grate	Green	5.40 lbs	12 lbs	2	$259.60 ea.
	G18SFB	18” Square Flat Grate	Black	5.40 lbs	12 lbs	2	$259.60 ea.
	G18SFS	18” Square Flat Grate	Sand	5.40 lbs	12 lbs	2	$266.00 ea.
	G18SFC	18” Square Flat Grate	Grey	5.40 lbs	12 bs	2	$266.00 ea.

Square Atrium Grates

	Part No.	Description	Color	Part Weight	Box Weight	Box Qty	List Price
	G9SAG	9” Square Atrium Grate	Green	0.65 lbs	6 lbs	8	$55.30 ea.
	G9SAB	9” Square Atrium Grate	Black	0.65 lbs	6 lbs	8	$55.30 ea.
	G12SAG	12” Square Atrium Grate	Green	1.30 lbs	12 lbs	8	$79.90 ea.
	G12SAB	12” Square Atrium Grate	Black	1.30 lbs	12 lbs	8	$79.90 ea.

Square Universal Grates

	Part No.	Description	Color	Part Weight	Box Weight	Box Qty	List Price
	G6SUG	6” Square Universal Grate	Green	0.55 lbs	13 lbs	20	$24.00 ea.
	G6SUB	6” Square Universal Grate	Black	0.55 lbs	13 lbs	20	$24.00 ea.
	G6SUS	6” Square Universal Grate	Sand	0.55 lbs	13 lbs	20	$25.40 ea.
	G6SUC	6” Square Universal Grate	Grey	0.55 lbs	13 lbs	20	$25.40 ea.

Note: The 6” Square Universal Grate fits 3” and 4” Sewer and Drain, Corrugated and Triple Wall Pipe, 3”, 4” and 6” Sewer and Drain Hub Fittings and 6” Round Catch Basins.

Large Round Flat Grates NEW

	Part No.	Description	Color	Part Weight	Box Weight	Box Qty	List Price
	G8RFG	8” Round Flat Grate (fits 8” S&D Pipe & Fittings (SDR35) and 8” Corrugated Pipe)	Green	0.8 lbs	14 lbs	16	$45.00 ea.
	G8RFB	8” Round Flat Grate (fits 8” S&D Pipe & Fittings (SDR35) and 8” Corrugated Pipe)	Black	0.8 lbs	14 lbs	16	$45.00 ea.
	G10RFG	10” Round Flat Grate (fits 10” S&D Pipe (SDR35), 10” Corrugated Pipe, and 10” Schedule 40 PVC Pipe)	Green	1.4 lbs	18 lbs	12	$55.00 ea.
	G10RFB	10” Round Flat Grate (fits 10” S&D Pipe (SDR35), 10” Corrugated Pipe, and 10” Schedule 40 PVC Pipe)	Black	1.4lbs	18 lbs	12	$55.00 ea.
	G12RFG	12” Round Flat Grate (fits 12” S&D Pipe (SDR35), 12” Corrugated Pipe, 12” Schedule 40 PVC Pipe, and 12” Concrete Pipe)	Green	2.4 lbs	11 lbs	4	$110.00 ea.
	G12RFB	12” Round Flat Grate (fits 12” S&D Pipe (SDR35), 12” Corrugated Pipe, 12” Schedule 40 PVC Pipe, and 12” Concrete Pipe)	Black	2.4 lbs	11 lbs	4	$110.00 ea.
	G15RFG	15” Round Flat Grate (fits 15” S&D Pipe (SDR35), 15” Corrugated Pipe, and 15” Concrete Pipe)	Green	4.8 lbs	11 lbs	2	$160.00 ea.
	G15RFB	15” Round Flat Grate (fits 15” S&D Pipe (SDR35), 15” Corrugated Pipe, and 15” Concrete Pipe)	Black	4.8 lbs	11 lbs	2	$160.00 ea.

Large Round Flat Covers/Lids NEW

	Part No.	Description	Color	Part Weight	Box Weight	Box Qty	List Price
	G12RCG	12” Round Flat Cover/Lid (fits 12” S&D Pipe (SDR35), 12” Corrugated Pipe, 12” Schedule 40 PVC Pipe, and 12” Concrete Pipe)	Green	2.8 lbs	13 lbs	4	$120.00 ea.
	G15RCG	15” Round Flat Cover/Lid (fits 15” S&D Pipe (SDR35), 15” Corrugated Pipe, and 15” Concrete Pipe)	Green	5.8 lbs	13 lbs	2	$170.00 ea.

Pop-Up Relief Valves

	Part No.	Description	Color	Part Weight	Box Weight	Box Qty	List Price
	APU	Pop-Up Valve (fits 3” and 4” hub fittings)	Green	0.30 lbs	7 lbs	20	$28.65 ea.
	APU3	Pop-Up Valve with 3” Elbow (fits 3” PVC Pipe)	Green	0.60 lbs	7 lbs	10	$35.65 ea.
	APU4	Pop-Up Valve with 4” Elbow (fits 4” PVC Pipe)	Green	0.90 lbs	9 lbs	8	$41.30 ea.
	APUP34	Pop-Up Valve with 4” Elbow and Adapter (fits 3” & 4” PVC and Corrugated Pipe)	Green	1.40 lbs	10 lbs	6	$50.50 ea.

Round Catch Basins

	Part No.	Description	Color	Part Weight	Box Weight	Box Qty	List Price
	BR61	6” Round Basin, 1 Outlet (fits 3” and 4” PVC & Corrugated Pipe)	Black	1.30 lbs	13 lbs	8	$33.50 ea.
	BR62	6” Round Basin, 2 Outlets (fits 3” and 4” PVC & Corrugated Pipe)	Black	1.50 lbs	14 lbs	8	$36.25 ea.

Square Catch Basins

	Part No.	Description	Color	Part Weight	Box Weight	Box Qty	List Price
	BS92	9” Square Basin, 2 Outlets (accepts Adapters [ABA34, ABAO34, ABA6] or Plug [ABP])	Black	2.00 lbs	13 lbs	6	$44.60 ea.
	BS94	9” Square Basin, 4 Outlets (accepts Adapters [ABA34, ABAO34, ABA6] or Plug [ABP])	Black	1.60 lbs	11 lbs	6	$57.95 ea.
	BS122	12” Square Basin, 2 Outlets (accepts Adapters [ABA34, ABAO34, ABA6] or Plug [ABP])	Black	3.70 lbs	21 lbs	5	$65.25 ea.
	BS124	12” Square Basin, 4 Outlets (accepts Adapters [ABA34, ABAO34, ABA6] or Plug [ABP])	Black	3.30 lbs	19 lbs	5	$90.50 ea.
	BS182	18” Square Basin, 2 Outlets (accepts Adapters [ABA34, ABAO34, ABA6] or Plug [ABP])	Black	9.10 lbs	21 lbs	2	$439.30 ea.
	BS184	18” Square Basin, 4 Outlets (accepts Adapters [ABA34, ABAO34, ABA6] or Plug [ABP])	Black	8.70 lbs	20 lbs	2	$466.00 ea.

Sump Box

	Part No.	Description	Color	Part Weight	Box Weight	Box Qty	List Price
	BS120	12” Square Sump Box (no outlets)	Black	4.10 lbs	22 lbs	5	$75.90 ea.

Low Profile Basins

	Part No.	Description	Color	Part Weight	Box Weight	Box Qty	List Price
	BS9LP	9” Low Profile Basin (accepts Basin Adapters [ABA34, ABAO34, ABA6])	Black	0.80 lbs	11 lbs	12	$38.35 ea.
	BS12LP	12” Low Profile Basin (accepts Basin Adapters [ABA34, ABAO34, ABA6])	Black	1.45 lbs	20 lbs	12	$48.10 ea.

Downspout Adapters

	Part No.	Description	Color	Part Weight	Box Weight	Box Qty	List Price
	ADS23	2” x 3” Downspout Adapter (fits 3” and 4” PVC or Corrugated Pipe)	Black	0.40 lbs	10 lbs	24	$9.75 ea.
	ADS34	3” x 4” Downspout Adapter (fits 3” and 4” PVC or Corrugated Pipe)	Black	0.40 lbs	10 lbs	24	$11.15 ea.

Basin Kits

	Part No.	Description	Grate Color	Part Weight	Box Weight	Box Qty	List Price
	K9G	9” Basin Kit with Green Grate	Green	4.20 lbs	18 lbs	4	$122.00 ea.
	K9B	9” Basin Kit with Black Grate	Black	4.20 lbs	18 lbs	4	$122.00 ea.
	K12G	12” Basin Kit with Green Grate	Green	6.70 lbs	29 lbs	4	$162.70 ea.
	K12B	12” Basin Kit with Black Grate	Black	6.70 lbs	29 lbs	4	$162.70 ea.

Kit contains: 1 – 9” or 12” Square Basin, 1 – 9” or 12” Square Flat Grate, 2 – Basin Adapters to 3” or 4” Pipe, 1 – Basin Plug

Drainage Accessories

	Part No.	Description	Color	Part Weight	Box Weight	Box Qty	List Price
	ABP	Basin Plug (fits 9”, 12” & 18” Square Basins Outlets)	Black	0.30 lbs	12 lbs	40	$9.75 ea.
	ABA34	Basin Adapter (adapts 9”, 12” & 18” Square Basin and 9” & 12” Low Profile Basin Outlets to 3” & 4” PVC and Corrugated Pipe)	Black	0.50 lbs	13 lbs	24	$12.20 ea.
	ABAO34	Offset Basin Adapter (adapts 9”, 12” & 18” Square Basin and 9” & 12” Low Profile Basin Outlets to 3” & 4” PVC and Corrugated Pipe)	Black	0.50 lbs	13 lbs	24	$13.00 ea.
	ABA6	Basin Adapter (adapts 9”, 12” & 18” Square Basin and 9” & 12” Low Profile Basin Outlets to 6” PVC and Corrugated Pipe)	Black	0.60 lbs	17 lbs	24	$14.40 ea.
	AFA34	Fitting Adapter (adapts 3” & 4” Hub Fitting to 3” & 4” PVC and Corrugated Pipe)	Black	0.55 lbs	15 lbs	24	$12.25 ea.
	ABR9	9” Square Basin Riser (extends height of 9” Square Basin by 6”)	Black	1.50 lbs	14 lbs	8	$46.70 ea.
	ABR12	12” Square Basin Riser (extends height of 12” Square Basin by 6”)	Black	2.15 lbs	11 lbs	4	$54.35 ea.

6” Round Valve Boxes

	Part No.	Description	Color (Lid/Base)	Part Weight	Box Wt.	Box/Pallet Quantity	List Price
	VBR6GB	6” Round Valve Box (ICV)	Green/Black	1.10 lbs	38 lbs	36/450	$10.75 ea.
	VBR6GG	6” Round Valve Box (ICV)	Green/Green	1.10 lbs	38 lbs	36/450	$11.90 ea.
	VBR6PP	6” Round Valve Box (Reclaimed Water)	Purple/Purple	1.10 lbs	38 lbs	36/450	$13.90 ea.
	VBR6SS	6” Round Valve Box (ICV)	Sand/Sand	1.10 lbs	38 lbs	36/450	$13.20 ea.
	VLR6G	6” Round Lid (ICV)	Green	0.20 lbs	10 lbs	48	$6.30 ea.
	VLR6P	6” Round Lid (Reclaimed Water)	Purple	0.20 lbs	10 lbs	48	$7.30 ea.
	VLR6S	6” Round Lid (ICV)	Sand	0.20 lbs	10 lbs	48	$6.90 ea.

10” Round Valve Boxes

	Part No.	Description	Color (Lid/Base)	Part Weight	Box Wt.	Box/Pallet Quantity	List Price
	VBR10GB	10” Round Valve Box (ICV)	Green/Black	2.40 lbs	40 lbs	16/240	$31.65 ea.
	VBR10GG	10” Round Valve Box (ICV)	Green/Green	2.40 lbs	40 lbs	16/240	$35.60 ea.
	VBR10PP	10” Round Valve Box (Reclaimed Water)	Purple/Purple	2.40 lbs	40 lbs	16/240	$41.60 ea.
	VBR10SS	10” Round Valve Box (ICV)	Sand/Sand	2.40 lbs	40 lbs	16/240	$39.50 ea.
	VLR10G	10” Round Lid (ICV)	Green	0.70 lbs	11 lbs	16	$12.60 ea.
	VLR10P	10” Round Lid (Reclaimed Water)	Purple	0.70 lbs	11 lbs	16	$14.50 ea.
	VLR10S	10” Round Lid (ICV)	Sand	0.70 lbs	11 lbs	16	$13.90 ea.
	VBA	3/8” X 2” Stainless Steel Bolt Assembly, 10/bag	Silver	0.09 lbs	5 lbs	40	$9.25 ea.

*Pallet quantities are not boxed.

14” x 19” Standard Rectangular Valve Boxes

	Part No.	Description	Color (Lid/Base)	Part Weight	Box Wt.	Box/Pallet Quantity	List Price
	VB1419GB	14” x 19” Standard Valve Box (ICV)	Green/Black	6.40 lbs	38 lbs	6/180	$67.00 ea.
	VB1419GG	14” x 19” Standard Valve Box (ICV)	Green/Green	6.40 lbs	38 lbs	6/180	$72.50 ea.
	VB1419PP	14” x 19” Standard Valve Box (Reclaimed Water)	Purple/Purple	6.40 lbs	38 lbs	6/180	$84.40 ea.
	VB1419SS	14” x 19” Standard Valve Box (ICV)	Sand/Sand	6.40 lbs	38 lbs	6/180	$80.50 ea.
	VLR1419G	14” x 19” Rectangular Lid (ICV)	Green	1.80 lbs	28 lbs	15	$37.00 ea.
	VLR1419P	14” x 19” Rectangular Lid (Reclaimed Water)	Purple	1.80 lbs	28 lbs	15	$42.20 ea.
	VLR1419S	14” x 19” Rectangular Lid (ICV)	Sand	1.80 lbs	28 lbs	15	$40.90 ea.
	VBA	3/8” x 2” Stainless Steel Bolt Assembly, 10/bag	Silver	0.09 lbs	5 lbs	40	$9.25 ea.

17” x 24” Jumbo Rectangular Valve Boxes

	Part No.	Description	Color (Lid/Base)	Part Weight	Box Wt.	Box/Pallet Quantity	List Price
	VB1724GB	17” x 24” Jumbo Valve Box (ICV)	Green/Black	10.50 lbs	44 lbs	4/100	$132.00 ea.
	VB1724GG	17” x 24” Jumbo Valve Box (ICV)	Green/Green	10.50 lbs	44 lbs	4/100	$138.50 ea.
	VB1724PP	17” x 24” Jumbo Valve Box (Reclaimed Water)	Purple/Purple	10.50 lbs	44 lbs	4/100	$151.60 ea.
	VB1724SS	17” x 24” Jumbo Valve Box (ICV)	Sand/Sand	10.50 lbs	44 lbs	4/100	$145.00 ea.
	VLR1724G	17” x 24” Rectangular Lid (ICV)	Green	3.00 lbs	32 lbs	10	$62.00 ea.
	VLR1724P	17” x 24” Rectangular Lid (Reclaimed Water)	Purple	3.00 lbs	32 lbs	10	$68.50 ea.
	VLR1724S	17” x 24” Rectangular Lid (ICV)	Sand	3.00 lbs	32 lbs	10	$65.90 ea.
	VBA	3/8” x 2” Stainless Steel Bolt Assembly, 10/bag	Silver	0.09 lbs	5 lbs	40	$9.25 ea.

*Pallet quantities are not boxed.

14” x 19” Low Profile Valve Boxes and Riser Extensions

	Part No.	Description	Color (Lid/Base)	Part Weight	Box Wt.	Box/Pallet Quantity	List Price
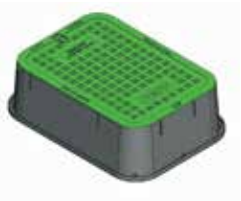	VBSLPGB	14” x 19” Low Profile Valve Box (ICV)	Green/Black	4.60 lbs	20 lbs	4/84	$63.30 ea.
	VBSLPGG	14” x 19” Low Profile Valve Box (ICV)	Green/Green	4.60 lbs	20 lbs	4/84	$70.00 ea.
	VBSLPPP	14” x 19” Low Profile Valve Box (Reclaimed Water)	Purple/Purple	4.60 lbs	20 lbs	4/84	$81.75 ea.
	VBSLPSS	14” x 19” Low Profile Valve Box (ICV)	Sand/Sand	4.60 lbs	20 lbs	4/84	$77.80 ea.
	VBSRB	14” x 19” Riser Extension	Black	2.80 lbs	19 lbs	6/140	$48.80 ea.
	VBSRG	14” x 19” Riser Extension	Green	2.80 lbs	19 lbs	6/140	$52.75 ea.
	VBSRP	14” x 19” Riser Extension	Purple	2.80 lbs	19 lbs	6/140	$56.70 ea.
	VBSRS	14” x 19” Riser Extension	Sand	2.80 lbs	19 lbs	6/140	$55.40 ea.
	VBA	3/8” X 2” Stainless Steel Bolt Assembly, 10/bag	Silver	0.09 lbs	5 lbs	40	$9.25 ea.

17” x 24” Low Profile Valve Boxes and Riser Extensions

	Part No.	Description	Color (Lid/Base)	Part Weight	Box Wt.	Box/Pallet Quantity	List Price
	VBJLPGB	17” x 24” Low Profile Valve Box (ICV)	Green/Black	7.50 lbs	32 lbs	4/50	$118.70 ea.
	VBJLPPP	17” x 24” Low Profile Valve Box (Reclaimed Water)	Purple/Purple	7.50 lbs	32 lbs	4/50	$138.50 ea.
	VBJLPSS	17” x 24” Low Profile Valve Box (ICV)	Sand/Sand	7.50 lbs	32 lbs	4/50	$131.90 ea.
	VBJRB	17” x 24” Riser Extension	Black	4.50 lbs	29 lbs	6/100	$89.70 ea.
	VBJRP	17” x 24” Riser Extension	Purple	4.50 lbs	29 lbs	6/100	$102.90 ea.
	VBJRS	17” x 24” Riser Extension	Sand	4.50 lbs	29 lbs	6/100	$100.00 ea.
	VBA	3/8” X 2” Stainless Steel Bolt Assembly, 10/bag	Silver	0.09 lbs	5 lbs	40	$9.25 ea.

*Pallet quantities are not boxed.

Down Fan Spray Jet and Assemblies

	Part No.	Description	Color Code	Wt. per 100	Bag Qty	Box Qty	Box Wt.	List Price
	EJDS32	0.032” Orifice, 360° Down Fan Spray Jet	Black	0.40 lbs	100	2,000	9 lbs	$0.62 ea.
	EJDS35	0.035” Orifice, 360° Down Fan Spray Jet	Brown	0.40 lbs	100	2,000	9 lbs	$0.62 ea.
	EJDS39	0.039” Orifice, 360° Down Fan Spray Jet	Blue	0.40 lbs	100	2,000	9 lbs	$0.62 ea.
	TFTDS36	36” Flex Poly Riser Lead for Down Fan Spray Jets w/ 1/4” Barbed Adapter (0.150” ID x 0.220” OD)	Black	2.40 lbs	100/ bundle	1,000	26 lbs	$1.07 ea.
	FSI12	12” Galvanized Wire I-Stake, 11 gauge	Silver	3.00 lbs	100	1,000	31 lbs	$0.47 ea.
	EJDS32-36	0.032” Orifice, 360° Down Fan Spray Jet w/ 36” Flex Poly Riser Lead (0.150” x 0.220”), 1/4” Barbed Adapter and Stake	Black	5.80 lbs	25/ bundle	600	39 lbs	$3.10 ea.
	EJDS35-36	0.035” Orifice, 360° Down Fan Spray Jet w/ 36” Flex Poly Riser Lead (0.150” x 0.220”), 1/4” Barbed Adapter and Stake	Brown	5.80 lbs	25/ bundle	600	39 lbs	$3.10 ea.
	EJDS39-36	0.039” Orifice, 360° Down Fan Spray Jet w/ 36” Flex Poly Riser Lead (0.150” x 0.220”), 1/4” Barbed Adapter and Stake	Blue	5.80 lbs	25/ bundle	600	39 lbs	$3.10 ea.

1/4” Flex Poly Tubing for Down Fan Spray Jets

	Part No.	Description	Color Code	Wt. per 100’	Coil Size	Box Qty	Box Wt.	List Price
	T220F/1000	1/4” Flex Poly Tubing for Down Fan Spray Jets (0.150” ID x 0.220” OD)	Black	0.8 lbs	1,000’	4,000’	35 lbs	$120.75 ea.

Bent Drip Sticks

	Part No.	Description	Color Code	Wt. per 100	Bag Qty	Box Qty	Box Weight	List Price
	EBDS4	Short Bent Drip Stick (4”)	Black	0.50 lbs	100	2,000	11 lbs	$0.30 ea.
	EBDS6	Standard Bent Drip Stick (6”)	Black	0.70 lbs	100	2,000	15 lbs	$0.32 ea.
NEW	FBDS5	5.5” Barbed Bent Drip Stick (fits 3 mm ID x 5 mm OD or 1/8” poly tubing)	Black	0.50 lbs	100	2,000	11 lbs	$0.40 ea.

Multi-Outlet Manifolds

	Part No.	Description	Color Code	Wt. per 100	Bag Qty	Box Qty	Box Weight	List Price
	FMC2	2-Way Flat Manifold	Black	0.10 lbs	100	2,000	3 lbs	$0.33 ea.
	FMC4	4-Way Flat Manifold	Black	0.20 lbs	100	2,000	5 lbs	$0.35 ea.
	FMO4	4-Way Open Stackable Flat Manifold	Black	0.20 lbs	100	2,000	5 lbs	$0.35 ea.

3 mm x 5 mm Flex Poly Tubing for MOD Assemblies

	Part No.	Description	Tubing Color	Wt. per 100’	Coil Size	Box Qty	Box Wt.	List Price
	T35/1000W	3 mm x 5 mm Flex Poly Tubing for MOD Assemblies (0.120” ID x 0.195” OD)	White	0.75 lbs	1,000’	4,000’	32 lbs	$139.47 ea.

Flat 2-Way Multi-Outlet Dripper (MOD) Assemblies

Part No.	Description	Tubing Color	Wt. per 100	Box Qty	Box Wt.	List Price
EADS6-24	2-Way MOD Assembly (6” Bent Drip Stick, 2x24” Leads)	White	4.10 lbs	300	15 lbs	$3.50 ea.
EADS6-30	2-Way MOD Assembly (6” Bent Drip Stick, 2x30” Leads)	White	4.90 lbs	300	18 lbs	$3.65 ea.

Flat 4-Way Multi-Outlet Dripper (MOD) Assemblies

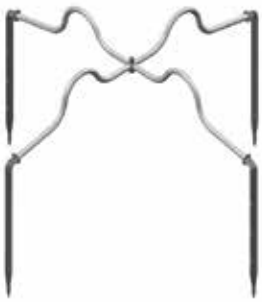

Part No.	Description	Tubing Color	Wt. per 100	Box Qty	Box Wt.	List Price
EADS6-1818	4-Way MOD Assembly (6” Bent Drip Stick, 4x18” Leads)	White	7.50 lbs	250	20 lbs	$5.00 ea.
EADS4-1818	4-Way MOD Assembly (4” Bent Drip Stick, 4x18” Leads)	White	6.70 lbs	250	19 lbs	$4.90 ea.
EADS6-2424	4-Way MOD Assembly (6” Bent Drip Stick, 4x24” Leads)	White	9.00 lbs	250	24 lbs	$5.20 ea.
EADS4-2424	4-Way MOD Assembly (4” Bent Drip Stick, 4x24” Leads)	White	8.20 lbs	250	23 lbs	$5.05 ea.
EADS6-3030	4-Way MOD Assembly (6” Bent Drip Stick, 4x30” Leads)	White	10.5 lbs	200	23 lbs	$5.40 ea.
EADS6-1830	4-Way MOD Assembly (6” Bent Drip Stick, 2x18”/2x30” Leads)	White	9.00 lbs	200	20 lbs	$5.20 ea.
EADS4-1830	4-Way MOD Assembly (4” Bent Drip Stick, 2x18”/2x30” Leads)	White	8.20 lbs	200	19 lbs	$5.05 ea.
EADS6-2436	4-Way MOD Assembly (6” Bent Drip Stick, 2x24”/2x36” Leads)	White	10.5 lbs	200	23 lbs	$5.40 ea.

Flat 4-Way Stackable Multi-Outlet Dripper (MOD) Assemblies

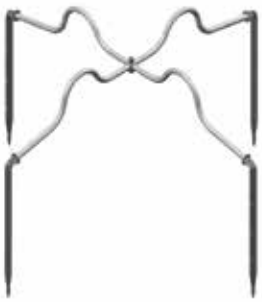

Part No.	Description	Tubing Color	Wt. per 100	Box Qty	Box Wt.	List Price
EADS6S-1818	4-Way Stackable MOD Assembly (6” Bent Drip Stick, 4x18” Leads)	White	7.50 lbs	250	20 lbs	$5.00 ea.
EADS6S-2424	4-Way Stackable MOD Assembly (6” Bent Drip Stick, 4x24” Leads)	White	9.00 lbs	250	24 lbs	$5.20 ea.
EADS6S-3030	4-Way Stackable MOD Assembly (6” Bent Drip Stick, 4x30” Leads)	White	10.5 lbs	200	23 lbs	$5.40 ea.
EADS6S-2436	4-Way Stackable MOD Assembly (6” Bent Drip Stick, 2x24”/2x36” Leads)	White	10.5 lbs	200	23 lbs	$5.40 ea.

AgriJet™ Micro-Sprinklers

Part No.	Description	Color Code	Wt. per 100	Bag Qty	Box Qty	Box Wt.	List Price
EJ30A	0.030” Orifice, 12-Stream 360° High-Low Trajectory Jet	Black	0.40 lbs	100	1,000	5 lbs	$0.59 ea.
EJ35A	0.035” Orifice, 12-Stream 360° High-Low Trajectory Jet	Orange	0.40 lbs	100	1,000	5 lbs	$0.59 ea.
EJ40A	0.040” Orifice, 12-Stream 360° High-Low Trajectory Jet	Blue	0.40 lbs	100	1,000	5 lbs	$0.59 ea.
EJ45A	0.045” Orifice, 12-Stream 360° High-Low Trajectory Jet	Violet	0.40 lbs	100	1,000	5 lbs	$0.59 ea.
EJ50A	0.050” Orifice, 12-Stream 360° High-Low Trajectory Jet	Green	0.40 lbs	100	1,000	5 lbs	$0.59 ea.
EJ30B	0.030” Orifice, 8-Stream Butterfly High Trajectory Jet	Black	0.40 lbs	100	1,000	5 lbs	$0.59 ea.
EJ35B	0.035” Orifice, 8-Stream Butterfly High Trajectory Jet	Orange	0.40 lbs	100	1,000	5 lbs	$0.59 ea.
EJ40B	0.040” Orifice, 8-Stream Butterfly High Trajectory Jet	Blue	0.40 lbs	100	1,000	5 lbs	$0.59 ea.
EJ45B	0.045” Orifice, 8-Stream Butterfly High Trajectory Jet	Violet	0.40 lbs	100	1,000	5 lbs	$0.59 ea.
EJ50B	0.050” Orifice, 8-Stream Butterfly High Trajectory Jet	Green	0.40 lbs	100	1,000	5 lbs	$0.59 ea.
EJ30C	0.030” Orifice, 8-Stream Standard Trajectory 180° Wrap-around Jet	Black	0.40 lbs	100	1,000	5 lbs	$0.59 ea.
EJ35C	0.035” Orifice, 8-Stream Standard Trajectory 180° Wrap-around Jet	Orange	0.40 lbs	100	1,000	5 lbs	$0.59 ea.
EJ40C	0.040” Orifice, 8-Stream Standard Trajectory 180° Wrap-around Jet	Blue	0.40 lbs	100	1,000	5 lbs	$0.59 ea.
EJ45C	0.045” Orifice, 8-Stream Standard Trajectory 180° Wrap-around Jet	Violet	0.40 lbs	100	1,000	5 lbs	$0.59 ea.
EJ50C	0.050” Orifice, 8-Stream Standard Trajectory 180° Wrap-around Jet	Green	0.40 lbs	100	1,000	5 lbs	$0.59 ea.
EJ30E	0.030” Orifice, 22-Stream 360° Standard Trajectory Jet	Black	0.40 lbs	100	1,000	5 lbs	$0.59 ea.
EJ35E	0.035” Orifice, 22-Stream 360° Standard Trajectory Jet	Orange	0.40 lbs	100	1,000	5 lbs	$0.59 ea.
EJ40E	0.040” Orifice, 22-Stream 360° Standard Trajectory Jet	Blue	0.40 lbs	100	1,000	5 lbs	$0.59 ea.
EJ45E	0.045” Orifice, 22-Stream 360° Standard Trajectory Jet	Violet	0.40 lbs	100	1,000	5 lbs	$0.59 ea.
EJ50E	0.050” Orifice, 22-Stream 360° Standard Trajectory Jet	Green	0.40 lbs	100	1,000	5 lbs	$0.59 ea.

AgriJet™ Micro-Sprinklers cont'd. and Assemblies

Part No.	Description	Color Code	Wt. per 100	Bag Qty	Box Qty	Box Wt.	List Price
EJ30J	0.030" Orifice, 16-Stream 360° Standard Trajectory Jet	Black	0.40 lbs	100	1,000	5 lbs	$0.59 ea.
EJ35J	0.035" Orifice, 16-Stream 360° Standard Trajectory Jet	Orange	0.40 lbs	100	1,000	5 lbs	$0.59 ea.
EJ40J	0.040" Orifice, 16-Stream 360° Standard Trajectory Jet	Blue	0.40 lbs	100	1,000	5 lbs	$0.59 ea.
EJ45J	0.045" Orifice, 16-Stream 360° Standard Trajectory Jet	Violet	0.40 lbs	100	1,000	5 lbs	$0.59 ea.
EJ50J	0.050" Orifice, 16-Stream 360° Standard Trajectory Jet	Green	0.40 lbs	100	1,000	5 lbs	$0.59 ea.

TFT24-XXY	24" Poly Lead (0.160" x 0.245"), Adapter and Specified Jet	N/A	2.60 lbs	100/ bundle	1,000	27 lbs	$1.56 ea.
TFT30-XXY	30" Poly Lead (0.160" x 0.245"), Adapter and Specified Jet	N/A	3.10 lbs	100/ bundle	1,000	32 lbs	$1.61 ea.
TFT36-XXY	36" Poly Lead (0.160" x 0.245"), Adapter and Specified Jet	N/A	3.60 lbs	100/ bundle	1,000	37 lbs	$1.66 ea.

Assembly Ordering Guide: XX = 30, 35, 40, 45, 50 orifice size. Y = A, B, C, E or J pattern.

AgriJet™ Deflector Cap

Part No.	Description	Color Code	Wt. per 100	Bag Qty	Box Qty	Box Wt.	List Price
EJDC	AgriJet™ Deflector Cap	Black	0.20 lbs	100	1,000	3 lbs	$0.40 ea.

Rhino™ Compensating Emitters

Part No.	Description	Color Code	Wt. per 100	Bag Qty	Box Qty	Box Weight	List Price
ERC5	0.5 gph, PC Emitter (with Check Valve)	Red	0.45 lbs	100	2,000	10 lbs	$0.61 ea.
ERC5BL	0.5 gph, PC Emitter (with Check Valve)	Blue	0.45 lbs	100	2,000	10 lbs	$0.61 ea.
ERC10	1.0 gph, PC Emitter (with Check Valve)	Black	0.45 lbs	100	2,000	10 lbs	$0.61 ea.
ERC20	2.0 gph, PC Emitter (with Check Valve)	Green	0.45 lbs	100	2,000	10 lbs	$0.61 ea.
ERC20DR	2.0 gph, PC Emitter (with Check Valve)	Dark Red	0.45 lbs	100	2,000	10 lbs	$0.61 ea.

Take Apart Pressure Compensating Emitters

Part No.	Description	Color Code	Wt. per 100	Bag Qty	Box Qty	Box Weight	List Price
ETAPC5	0.5 gph, Take Apart PC Emitter	Red	0.45 lbs	100	2,000	10 lbs	$0.69 ea.
ETAPC10	1.0 gph, Take Apart PC Emitter	Black	0.45 lbs	100	2,000	10 lbs	$0.69 ea.
ETAPC20	2.0 gph, Take Apart PC Emitter	Green	0.45 lbs	100	2,000	10 lbs	$0.69 ea.

Take Apart Flag Emitters

Part No.	Description	Color Code	Wt. per 100	Bag Qty	Box Qty	Box Weight	List Price
ETA10	1.0 gph, Take Apart Flag Emitter (with C-LOK™)	Black	0.33 lbs	100	2,000	7 lbs	$0.42 ea.
ETA20G	2.0 gph, Take Apart Flag Emitter (with C-LOK™)	Light Green	0.33 lbs	100	2,000	7 lbs	$0.42 ea.
ETA20B	2.0 gph, Take Apart Flag Emitter (with C-LOK™)	Blue	0.33 lbs	100	2,000	7 lbs	$0.42 ea.
ETA40Y	4.0 gph, Take Apart Flag Emitter (with C-LOK™)	Yellow	0.33 lbs	100	2,000	7 lbs	$0.42 ea.
ETA40G	4.0 gph, Take Apart Flag Emitter (with C-LOK™)	Dark Green	0.33 lbs	100	2,000	7 lbs	$0.42 ea.

Mini-Inline Emitters

Part No.	Description	Color Code	Wt. per 100	Bag Qty	Box Qty	Box Weight	List Price
EMIL5	0.5 gph, Mini-Inline Emitter	Red	0.30 lbs	100	2,000	7 lbs	$0.77 ea.
EMIL10	1.0 gph, Mini-Inline Emitter	Black	0.30 lbs	100	2,000	7 lbs	$0.77 ea.
EMIL20	2.0 gph, Mini-Inline Emitter	Green	0.30 lbs	100	2,000	7 lbs	$0.77 ea.

8 Outlet Adjustable Bubbler

Part No.	Description	Color Code	Wt. per 100	Bag Qty	Box Qty	Box Weight	List Price
EAB8	8 Outlet, 0 - 40 gph/Outlet Adjustable Bubbler with 1/4” Barbed Elbows, 1/2” FIPT Swivel Inlet (includes tool for valve adjustment, 45 psi max)	Black	13.40 lbs	10	30	5 lbs	$26.00 ea.

4 Outlet Pressure Compensating Bubblers

Part No.	Description	Color Code	Wt. per 100	Bag Qty	Box Qty	Box Weight	List Price
FM4	4 Outlet Manifold w/ 1/4” Swivel Barbed Elbows, 1/2” FIPT Inlet	Grey	4.30 lbs	25	100	5 lbs	$6.50 ea.
EPCB2	2 gph/Outlet, 4 Swivel Barbed Outlets, 1/2” FIPT PC Bubbler	Blue	4.40 lbs	25	100	5 lbs	$6.75 ea.
EPCB6	6 gph/Outlet, 4 Swivel Barbed Outlets, 1/2” FIPT PC Bubbler	Black	4.40 lbs	25	100	5 lbs	$6.75 ea.
EPCB10	10 gph/Outlet, 4 Swivel Barbed Outlets, 1/2” FIPT PC Bubbler	Red	4.40 lbs	25	100	5 lbs	$6.75 ea.
EPCB20	20 gph/Outlet, 4 Swivel Barbed Outlets, 1/2” FIPT PC Bubbler	Green	4.40 lbs	25	100	5 lbs	$6.75 ea.

Zebra™ Adjustable Stream Emitters

Part No.	Description	Color Code	Wt. per 100	Bag Qty	Box Qty	Box Weight	List Price
EZB360	360° 8-Stream Adjustable Emitter with Barbed Inlet	Black	0.36 lbs	100	1,000	5 lbs	$0.71 ea.
EZT360	360° 8-Stream Adjustable Emitter with Threaded Inlet	Black	0.36 lbs	100	1,000	5 lbs	$0.71 ea.
EZS360	360° 8-Stream Adjustable Emitter on 6” Stake (includes additional 1/4” barbed connector)	Black	1.16 lbs	50	1,000	14 lbs	$1.12 ea.
EZB180	180° 5-Stream Adjustable Emitter with Barbed Inlet	Black	0.36 lbs	100	1,000	5 lbs	$0.71 ea.
EZT180	180° 5-Stream Adjustable Emitter with Threaded Inlet	Black	0.36 lbs	100	1,000	5 lbs	$0.71 ea.
EZS180	180° 5-Stream Adjustable Emitter on 6” Stake (includes additional 1/4” barbed connector)	Black	1.16 lbs	50	1,000	14 lbs	$1.12 ea.

Zebra™ Adjustable Fan Sprayers

Part No.	Description	Color Code	Wt. per 100	Bag Qty	Box Qty	Box Weight	List Price
EZBFAN	Fan Spray Adjustable Emitter with Barbed Inlet	Black	0.46 lbs	100	1,000	6 lbs	$0.93 ea.
EZTFAN	Fan Spray Adjustable Emitter with Threaded Inlet	Black	0.46 lbs	100	1,000	6 lbs	$0.93 ea.
EZSFAN	Fan Spray Adjustable Emitter on 6” Stake (includes additional 1/4” barbed connector)	Black	1.26 lbs	50	1,000	14 lbs	$1.40 ea.

Zebra™ Adjustable Bubblers

Part No.	Description	Color Code	Wt. per 100	Bag Qty	Box Qty	Box Weight	List Price
EZBBUB	Adjustable Bubbler with Barbed Inlet	Black	0.42 lbs	100	1,000	5 lbs	$0.88 ea.
EZTBUB	Adjustable Bubbler with Threaded Inlet	Black	0.42 lbs	100	1,000	5 lbs	$0.88 ea.
EZSBUB	Adjustable Bubbler on 6” Stake (includes additional 1/4” barbed connector)	Black	1.22 lbs	50	1,000	14 lbs	$1.33 ea.

Anteater™ Adjustable Jets

Part No.	Description	Color Code	Wt. per 100	Bag Qty	Box Qty	Box Weight	List Price
EAJ360	360° Stream Spray Adjustable Jet w/ Threaded Inlet	Red	0.55 lbs	50	500	4 lbs	$1.60 ea.
EAJ180	180° Fan Spray Adjustable Jet w/ Threaded Inlet	Blue	0.55 lbs	50	500	4 lbs	$1.60 ea.
EAJ90	90° Fan Spray Adjustable Jet w/ Threaded Inlet	Black	0.55 lbs	50	500	4 lbs	$1.60 ea.

Adjustable Micro-Sprinkler

Part No.	Description	Color Code	Wt. per 100	Bag Qty	Box Qty	Box Weight	List Price
EAMS	0 - 22 gph, Adjustable Micro-Sprinkler w/ Threaded Inlet	Black	0.80 lbs	50	300	4 lbs	$3.35 ea.

Cyclone™ Emitter NEW

Part No.	Description	Color Code	Wt. per 100	Bag Qty	Box Qty	Box Weight	List Price
EV10	1.0 gph, Cyclone™ (Vortex style) Emitter w/ 1/8" Barbed Inlet	Black	0.20 lbs	100	2,000	5 lbs	$0.35 ea.
EV20	2.0 gph, Cyclone™ (Vortex style) Emitter/Fogger w/ 1/8" Barbed Inlet	Green	0.20 lbs	100	2,000	5 lbs	$0.35 ea.
EV40	4.0 gph, Cyclone™ (Vortex style) Emitter/Fogger w/ 1/8" Barbed Inlet	Brown	0.20 lbs	100	2,000	5 lbs	$0.35 ea.

Spray Sticks

Part No.	Description	Color Code	Wt. per 100	Bag Qty	Box Qty	Box Weight	List Price
ESS360	360° Medium Flow Spray Stick	Blue	1.00 lbs	100	1,000	10 lbs	$0.38 ea.
ESS160BL	160° High Flow Spray Stick	Black	1.00 lbs	100	1,000	10 lbs	$0.38 ea.
ESS160DG	160° Medium Flow Spray Stick	Green	1.00 lbs	100	1,000	10 lbs	$0.38 ea.
ESS160AV	160° Low Flow Spray Stick	Avocado	1.00 lbs	100	1,000	10 lbs	$0.38 ea.
ESS160TC	160° Mini Flow Spray Stick	Terracotta	1.00 lbs	100	1,000	10 lbs	$0.38 ea.
ESS90BR	90° Low Flow Spray Stick	Brown	1.00 lbs	100	1,000	10 lbs	$0.38 ea.
ESS90C	90° Mini Flow Spray Stick	Grey	1.00 lbs	100	1,000	10 lbs	$0.38 ea.

Single Piece Jets

Part No.	Description	Color Code	Wt. per 100	Bag Qty	Box Qty	Box Weight	List Price
EJ436	0.040" Orifice, 360° Jet	Blue	0.10 lbs	100	1,000	2 lbs	$0.34 ea.
EJ536	0.050" Orifice, 360° Jet	Green	0.10 lbs	100	1,000	2 lbs	$0.34 ea.
EJ636	0.060" Orifice, 360° Jet	Red	0.10 lbs	100	1,000	2 lbs	$0.34 ea.
EJ418	0.040" Orifice, 180° Jet	Blue	0.10 lbs	100	1,000	2 lbs	$0.34 ea.
EJ518	0.050" Orifice, 180° Jet	Green	0.10 lbs	100	1,000	2 lbs	$0.34 ea.
EJ618	0.060" Orifice, 180° Jet	Red	0.10 lbs	100	1,000	2 lbs	$0.34 ea.
EJ49	0.040" Orifice, 90° Jet	Blue	0.10 lbs	100	1,000	2 lbs	$0.34 ea.
EJ59	0.050" Orifice, 90° Jet	Green	0.10 lbs	100	1,000	2 lbs	$0.34 ea.
EJ69	0.060" Orifice, 90° Jet	Red	0.10 lbs	100	1,000	2 lbs	$0.34 ea.

Foggers

	Part No.	Description	Color Code	Wt. per 100	Bag Qty	Box Qty	Box Weight	List Price
	EFB20	1.5 gph, Plastic Fogger with 1/4" Barbed Inlet (0.020" Orifice)	Grey	0.70 lbs	100	1,000	8 lbs	$1.30 ea.
	EFB25	2.0 gph, Plastic Fogger with 1/4" Barbed Inlet (0.025" Orifice)	Black	0.70 lbs	100	1,000	8 lbs	$1.30 ea.
	EFB35	3.0 gph, Plastic Fogger with 1/4" Barbed Inlet (0.035" Orifice)	Tan	0.70 lbs	100	1,000	8 lbs	$1.30 ea.
	EFT20	1.5 gph, Plastic Fogger with 1/4" Threaded Inlet (0.020" Orifice)	Grey	0.70 lbs	100	1,000	8 lbs	$1.30 ea.
	EFT25	2.0 gph, Plastic Fogger with 1/4" Threaded Inlet (0.025" Orifice)	Black	0.70 lbs	100	1,000	8 lbs	$1.30 ea.
	EFT35	3.0 gph, Plastic Fogger with 1/4" Threaded Inlet (0.035" Orifice)	Tan	0.70 lbs	100	1,000	8 lbs	$1.30 ea.
NEW	EFD20	1.5 gph per side, Dual Head Plastic Fogger Assembly w/ 1/4" Barbed Inlet (0.020" Orifice)	Grey	2.00 lbs	50	500	11 lbs	$2.75 ea.
	EFD25	2.0 gph per side, Dual Head Plastic Fogger Assembly w/ 1/4" Barbed Inlet (0.025" Orifice)	Black	2.00 lbs	50	500	11 lbs	$2.75 ea.
	EFD35	3.0 gph per side, Dual Head Plastic Fogger Assembly w/ 1/4" Barbed Inlet (0.035" Orifice)	Tan	2.00 lbs	50	500	11 lbs	$2.75 ea.
	EMB30	3.0 gph, Plastic Elbow Fogging Nozzle with 1/4" Barbed Inlet	Black	0.40 lbs	100	500	3 lbs	$1.47 ea.

Misters

	Part No.	Description	Color Code	Wt. per 100	Bag Qty	Box Qty	Box Weight	List Price
	EM6	0.6 gph, Plastic Misting Nozzle w/ 100 Mesh Stainless Steel Screen, 1/8" MIPT Inlet	Grey	0.60 lbs	50	250	2 lbs	$8.00 ea.
	EM10	1.0 gph, Plastic Misting Nozzle w/ 100 Mesh Stainless Steel Screen, 1/8" MIPT Inlet	Blue	0.60 lbs	50	250	2 lbs	$8.00 ea.
	FTM	PVC Reducing Threaded Tee, 1/2" x 1/2" x 1/8" (for use with EM6 and EM10 misters)	White	4.50 lbs	25	150	8 lbs	$2.70 ea.

17 and 18 mm PC Dripperline w/ Check Valve

Part No.	Description	Color Code	Coil Weight	Coil Size	Plt. Qty	Pallet Wt.	List Price
ED17-612/500	0.6 gph, 17 mm PC Dripline w/ CV (0.560” x 0.660”,12” Spacing)	Brown	20.00 lbs	500’	32	675 lbs	$332.00 ea.
ED17-612/100	0.6 gph, 17 mm PC Dripline w/ CV (0.560” x 0.660”,12” Spacing)	Brown	4.00 lbs	100’	72	320 lbs	$72.60 ea.
ED17-618/500	0.6 gph, 17 mm PC Dripline w/ CV (0.560” x 0.660”,18” Spacing)	Brown	19.50 lbs	500’	32	660 lbs	$294.80 ea.
ED17-618/100	0.6 gph, 17 mm PC Dripline w/ CV (0.560” x 0.660”,18” Spacing)	Brown	3.90 lbs	100’	72	315 lbs	$65.60 ea.
ED17-1012/500	1.0 gph, 17 mm PC Dripline w/ CV (0.560” x 0.660”,12” Spacing)	Brown	20.00 lbs	500’	32	675 lbs	$332.00 ea.
ED17-1012/250	1.0 gph, 17 mm PC Dripline w/ CV (0.560” x 0.660”,12” Spacing)	Brown	10.00 lbs	250’	40	415 lbs	$172.50 ea.
ED17-1012/100	1.0 gph, 17 mm PC Dripline w/ CV (0.560” x 0.660”,12” Spacing)	Brown	4.00 lbs	100’	72	320 lbs	$72.60 ea.
ED17-1018/500	1.0 gph, 17 mm PC Dripline w/ CV (0.560” x 0.660”,18” Spacing)	Brown	19.50 lbs	500’	32	660 lbs	$294.80 ea.
ED17-1018/100	1.0 gph, 17 mm PC Dripline w/ CV (0.560” x 0.660”,18” Spacing)	Brown	3.90 lbs	100’	72	315 lbs	$65.60 ea.

Part No.	Description	Color Code	Coil Weight	Coil Size	Plt. Qty	Pallet Wt.	List Price
ED18-612/500	0.6 gph, 18 mm PC Dripline w/ CV (0.600” x 0.700”,12” Spacing)	Black	21.50 lbs	500’	32	720 lbs	$309.00 ea.
ED18-612/100	0.6 gph, 18 mm PC Dripline w/ CV (0.600” x 0.700”,12” Spacing)	Black	4.30 lbs	100’	72	345 lbs	$68.00 ea.
ED18-618/500	0.6 gph, 18 mm PC Dripline w/ CV (0.600” x 0.700”,18” Spacing)	Black	21.00 lbs	500’	32	710 lbs	$271.60 ea.
ED18-618/100	0.6 gph, 18 mm PC Dripline w/ CV (0.600” x 0.700”,18” Spacing)	Black	4.20 lbs	100’	72	340 lbs	$60.80 ea.
ED18-1012/500	1.0 gph, 18 mm PC Dripline w/ CV (0.600” x 0.700”,12” Spacing)	Black	21.50 lbs	500’	32	720 lbs	$309.00 ea.
ED18-1012/100	1.0 gph, 18 mm PC Dripline w/ CV (0.600” x 0.700”,12” Spacing)	Black	4.30 lbs	100’	72	345 lbs	$68.00 ea.
ED18-1018/500	1.0 gph, 18 mm PC Dripline w/ CV (0.600” x 0.700”,18” Spacing)	Black	21.00 lbs	500’	32	710 lbs	$271.60 ea.
ED18-1018/100	1.0 gph, 18 mm PC Dripline w/ CV (0.600” x 0.700”,18” Spacing)	Black	4.20 lbs	100’	72	340 lbs	$60.80 ea.

Other spacing and coil lengths available. See specifications in back of this catalog.

1/4” Cobra™ Dripperline

	Part No.	Description	Color Code	Wt. per 100’	Coil Size	Box Qty	Box Wt.	List Price
	ED12BL/50	0.5 gph, 1/4” Dripperline (0.170” x 0.250”, 12” Spacing)	Black	1.10 lbs	50’	36	21 lbs	$9.65 ea.
	ED6BL/50	0.5 gph, 1/4” Dripperline (0.170” x 0.250”, 6” Spacing)	Black	1.20 lbs	50’	36	22 lbs	$13.23 ea.
	ED6BR/50	0.5 gph, 1/4” Dripperline (0.170” x 0.250”, 6” Spacing)	Brown	1.20 lbs	50’	36	22 lbs	$14.33 ea.
	ED12BL/100	0.5 gph, 1/4” Dripperline (0.170” x 0.250”, 12” Spacing)	Black	1.10 lbs	100’	24	28 lbs	$17.64 ea.
	ED9BL/100	0.5 gph, 1/4” Dripperline (0.170” x 0.250”, 9” Spacing)	Black	1.15 lbs	100’	24	29 lbs	$20.40 ea.
	ED6BL/100	0.5 gph, 1/4” Dripperline (0.170” x 0.250”, 6” Spacing)	Black	1.20 lbs	100’	24	30 lbs	$23.81 ea.
	ED12BR/100	0.5 gph, 1/4” Dripperline (0.170” x 0.250”, 12” Spacing)	Brown	1.10 lbs	100’	24	28 lbs	$19.30 ea.
	ED6BR/100	0.5 gph, 1/4” Dripperline (0.170” x 0.250”, 6” Spacing)	Brown	1.20 lbs	100’	24	30 lbs	$26.02 ea.
	ED12BL/500	0.5 gph, 1/4” Dripperline (0.170” x 0.250”, 12” Spacing)	Black	1.10 lbs	500’	4	26 lbs	$88.20 ea.
	ED6BL/500	0.5 gph, 1/4” Dripperline (0.170” x 0.250”, 6” Spacing)	Black	1.20 lbs	500’	4	26 lbs	$121.28 ea.
	ED6BR/500	0.5 gph, 1/4” Dripperline (0.170” x 0.250”, 6” Spacing)	Brown	1.20 lbs	500’	4	26 lbs	$133.40 ea.
	ED12BL/1000	0.5 gph, 1/4” Dripperline (0.170” x 0.250”, 12” Spacing)	Black	1.10 lbs	1,000’	2	24 lbs	$170.89 ea. (MTO)
	ED6BL/1000	0.5 gph, 1/4” Dripperline (0.170” x 0.250”, 6” Spacing)	Black	1.20 lbs	1,000’	2	24 lbs	$231.53 ea. (MTO)
	ED6BR/1000	0.5 gph, 1/4” Dripperline (0.170” x 0.250”, 6” Spacing)	Brown	1.20 lbs	1,000’	2	25 lbs	$254.68 ea. (MTO)

Polyethylene Supply Tubing

	Part No.	Description	Color Code	Coil Weight	Coil Size	Pallet Qty	Pallet Wt.	List Price
	T620/100	1/2” Poly Tubing w/ Double Green Stripe (0.520” ID x 0.620” OD)	Black/ Green	3.60 lbs	100’	162	615 lbs	$33.00 ea.
	T620/500	1/2” Poly Tubing w/ Double Green Stripe (0.520” ID x 0.620” OD)	Black/ Green	18.00 lbs	500’	32	605 lbs	$156.00 ea.
	T700/50	1/2” Poly Tubing (0.600” ID x 0.700” OD)	Black	2.05 lbs	50’	180	405 lbs	$22.60 ea.
	T700/100	1/2” Poly Tubing (0.600” ID x 0.700” OD)	Black	4.10 lbs	100’	144	625 lbs	$33.00 ea.
	T700/250	1/2” Poly Tubing (0.600” ID x 0.700” OD)	Black	10.00 lbs	250’	40	435 lbs	$79.00 ea.
	T700/500	1/2” Poly Tubing (0.600” ID x 0.700” OD)	Black	20.50 lbs	500’	32	690 lbs	$138.00 ea.
	T700/1000	1/2” Poly Tubing (0.600” ID x 0.700” OD)	Black	41.00 lbs	1,000’	28	1,180 lbs	$277.00 ea.
	T710/100	1/2” Poly Tubing w/ Double Blue Stripe (0.620” ID x 0.710” OD)	Black/ Blue	3.80 lbs	100’	144	545 lbs	$33.00 ea.
	T710/500	1/2” Poly Tubing w/ Double Blue Stripe (0.620” ID x 0.710” OD)	Black/ Blue	19.00 lbs	500’	32	645 lbs	$138.00 ea.
	T830/100	20 mm Poly Tubing (0.720” ID x 0.830” OD)	Black	5.40 lbs	100’	108	625 lbs	$45.00 ea.
	T830/500	20 mm Poly Tubing (0.720” ID x 0.830” OD)	Black	27.00 lbs	500”	28	795 lbs	$200.00 ea.
	T940/100	3/4” Poly Tubing (0.830” ID x 0.940” OD)	Black	6.20 lbs	100’	48	330 lbs	$52.00 ea.
	T940/250	3/4” Poly Tubing (0.830” ID x 0.940” OD)	Black	15.50 lbs	250’	36	595 lbs	$124.00 ea.
	T940/500	3/4” Poly Tubing (0.830” ID x 0.940” OD)	Black	31.00 lbs	500’	28	900 lbs	$232.00 ea.

White Polyethylene Distribution Tubing

	Part No.	Description	Color Code	Wt. per 100'	Coil Size	Box Qty	Box Wt.	List Price
	T185/100W	1/8" Poly Tubing (0.125" ID x 0.185" OD)	White	0.6 lbs	100'	40	25 lbs	$10.78 ea. (MTO)
	T250/100W	1/4" Poly Tubing (0.170" ID x 0.250" OD)	White	1.1 lbs	100'	28	32 lbs	$17.12 ea. (MTO)
	T35/1000W	3 mm x 5 mm Flex Poly Tubing for MOD Assemblies (0.120" ID x 0.195" OD)	White	0.8 lbs	1,000'	4	34 lbs	$139.47 ea.
	T185/1000W	1/8" Poly Tubing (0.125" ID x 0.185" OD)	White	0.6 lbs	1,000'	4	27 lbs	$101.43 ea. (MTO)
	T250/1000W	1/4" Poly Tubing (0.170" ID x 0.250" OD)	White	1.1 lbs	1,000'	2	24 lbs	$164.82 ea. (MTO)

MTO - Made to Order. 50,000' for MTO white polyethylene distribution tubing. Other colors available. Call for details.

White Polyethylene Supply Tubing

	Part No.	Description	Color Code	Coil Weight	Coil Size	Pallet Qty	Pallet Wt.	List Price
	T700/100W	1/2" Poly Tubing (0.600" ID x 0.700" OD)	White	4.10 lbs	100'	144	625 lbs	$40.57 ea.
	T700/500W	1/2" Poly Tubing (0.600" ID x 0.700" OD)	White	20.50 lbs	500'	32	690 lbs	$177.50 ea.
	T700/1000W	1/2" Poly Tubing (0.600" ID x 0.700" OD)	White	41.00 lbs	1,000'	28	1,180 lbs	$352.47 ea. (MTO)
	T940/100W	3/4" Poly Tubing (0.830" ID x 0.940" OD)	White	6.20 lbs	100'	48	330 lbs	$63.39 ea.
	T940/250W	3/4" Poly Tubing (0.830" ID x 0.940" OD)	White	15.50 lbs	250'	36	595 lbs	$152.15 ea. (MTO)
	T940/500W	3/4" Poly Tubing (0.830" ID x 0.940" OD)	White	31.00 lbs	500'	28	900 lbs	$285.27 ea.

MTO - Made to Order. Two pallet minimum for MTO white polyethylene supply tubing. Made to order supply tubing can be made with single or double striple and other colors available. Call for details.

Polyethylene Distribution Tubing

	Part No.	Description	Color Code	Wt. per 100'	Coil Size	Box Qty	Box Wt.	List Price
	T185/100	1/8" Poly Tubing (0.125" x 0.185")	Black	0.6 lbs	100'	40	25 lbs	$6.76 ea.
	T220/100	1/4" Poly Tubing (0.160" x 0.220")	Black	0.7 lbs	100'	32	24 lbs	$7.85 ea.
	T250/50	1/4" Poly Tubing (0.170" x 0.250")	Black	1.1 lbs	50'	40	23 lbs	$6.76 ea.
	T250/100	1/4" Poly Tubing (0.170" x 0.250")	Black	1.1 lbs	100'	28	32 lbs	$9.96 ea.
	T185/1000	1/8" Poly Tubing (0.125" x 0.185")	Black	0.6 lbs	1,000'	4	27 lbs	$62.79 ea.
	T185/2000	1/8" Poly Tubing (0.125" x 0.185")	Black	0.6 lbs	2,000'	3	37 lbs	$112.30 ea.
	T220F/1000	1/4" Flex Poly Tubing (0.150" x 0.220")	Black	0.8 lbs	1,000'	4	35 lbs	$120.75 ea.
	T220/1000	1/4" Poly Tubing (0.160" x 0.220")	Black	0.7 lbs	1,000'	4	30 lbs	$74.87 ea.
	T220/2000	1/4" Poly Tubing (0.160" x 0.220")	Black	0.7 lbs	2,000'	N/A	N/A	$140.00 ea.
	T250/500	1/4" Poly Tubing (0.170" x 0.250")	Black	1.1 lbs	500'	4	25 lbs	$59.78 ea.
	T250/1000	1/4" Poly Tubing (0.170" x 0.250")	Black	1.1 lbs	1,000'	2	24 lbs	$105.05 ea.
	T250/1500	1/4" Poly Tubing (0.170" x 0.250")	Black	1.1 lbs	1,500'	N/A	N/A	$150.00 ea.

Vinyl Distribution Tubing

	Part No.	Description	Color Code	Wt. per 100'	Coil Size	Box Qty	Box Wt.	List Price
	T185V/100	1/8" Vinyl Tubing (0.125" x 0.185")	Black	1.0 lbs	100'	40	41 lbs	$11.70 ea.
	T220V/100	1/4" Vinyl Tubing (0.160" x 0.220")	Black	1.1 lbs	100'	32	37 lbs	$13.89 ea.
	T250V/100	1/4" Vinyl Tubing (0.170" x 0.250")	Black	1.7 lbs	100'	28	47 lbs	$18.28 ea.
	T250HWV/100	1/4" Heavy Wall Vinyl Tubing (0.155" x 0.250")	Black	2.0 lbs	100'	28	54 lbs	$27.41 ea.
	T185V/1000	1/8" Vinyl Tubing (0.125" x 0.185")	Black	1.0 lbs	1,000'	4	43 lbs	$122.73 ea.
	T220V/1000	1/4" Vinyl Tubing (0.160" x 0.220")	Black	1.1 lbs	1,000'	2	24 lbs	$143.19 ea.
	T220V/2000	1/4" Vinyl Tubing (0.160" x 0.220")	Black	1.1 lbs	2,000'	N/A	N/A	$270.00 ea.
	T250V/500	1/4" Vinyl Tubing (0.170" x 0.250")	Black	1.7 lbs	500'	4	39 lbs	$103.75 ea.
	T250V/1000	1/4" Vinyl Tubing (0.170" x 0.250")	Black	1.7 lbs	1,000'	2	38 lbs	$192.87 ea.

Distribution Tubing in Bucket

Part No.	Description	Buckets/ Box	Buckets/ Pallet	Item Wt.	Boxed List Price	Pallet List Price
T185/2000BKT	1/8” Poly Tubing in Bucket (0.125” x 0.185”), 2,000’	2	64	14 lbs	$165.00 ea.	$145.00 ea.
T185/2000S	1/8” Poly Tubing Replacement Coil (0.125” x 0.185”), 2,000’	3	N/A	12 lbs	$155.00 ea.	N/A
T250/1000BKT	1/4” Poly Tubing in Bucket (0.170” x 0.250”), 1,000’	2	64	13 lbs	$125.00 ea.	$105.00 ea.
T250/1000S	1/4” Poly Tubing Replacement Coil (0.170” x 0.250”), 1,000’	3	N/A	11 lbs	$115.00 ea.	N/A
T250V/1000BKT	1/4” Vinyl Tubing in Bucket (0.170” x 0.250”), 1,000’	2	64	19 lbs	$209.00 ea.	$187.00 ea.
T250V/1000S	1/4” Vinyl Tubing Replacement Coil (0.170” x 0.250”), 1,000’	3	N/A	17 lbs	$198.00 ea.	N/A

Note: Pallet quantities are not boxed.

Flex PVC IPS Hose

Part No.	Description	Color Code	Coil Weight	Coil Size	Pallet Qty	Pallet Wt.	List Price
TIPS50/50	1/2” Flex PVC IPS Hose (0.546” ID x 0.840” OD, max pressure rating of 65 psi @ 73° F)	Black	10.0 lbs	50’	72	755 lbs	$140.00 ea.
TIPS50/100	1/2” Flex PVC IPS Hose (0.546” ID x 0.840” OD, max pressure rating of 65 psi @ 73° F)	Black	20.0 lbs	100’	72	1,475 lbs	$240.00 ea.

Swing Riser Pipe

Part No.	Description	Color Code	Coil Weight	Coil Size	Box / Pallet Qty	Box Wt.	List Price
TSR/100	Flex Swing Riser Pipe, Textured Surface (0.490” ID x 0.690” OD, max pressure rating of 80 psi @ 110° F)	Black	7.30 lbs	100’	6 / 144	46 lbs	$60.00 ea.

Micro-Fittings

	Part No.	Description	Color Code	Wt. per 100	Bag Qty	Box Qty	Box Weight	List Price
	FC125	1/8” Barbed Coupling	Black	0.07 lbs	100	5,000	5 lbs	$0.16 ea.
	FC250	1/4” Barbed Coupling	Black	0.14 lbs	100	5,000	8 lbs	$0.15 ea.
	FBB250HD	1/4” Heavy Duty Adapter (barb x barb)	Black	0.12 lbs	100	5,000	8 lbs	$0.16 ea.
	FT125	1/8” Barbed Tee	Black	0.10 lbs	100	3,000	4 lbs	$0.45 ea.
	FT250	1/4” Barbed Tee	Black	0.19 lbs	100	3,000	7 lbs	$0.24 ea.
	FEL250	1/4” Barbed Elbow	Black	0.13 lbs	100	3,000	5 lbs	$0.22 ea.
	FX250	1/4” Barbed Cross	Black	0.25 lbs	50	1,000	4 lbs	$0.40 ea.
	FGP2	Dual Goof Plug (10/rack)	Black	0.11 lbs	100	5,000	7 lbs	$0.07 ea.
	FGPT	Threaded Goof Plug	Black	0.10 lbs	100	2,000	3 lbs	$0.51 ea.
	FBP250	Bug Plug for T220 and T250 Distribution Tubing	Black	0.11 lbs	100	5,000	7 lbs	$0.24 ea.

Micro-Fitting Large Packs

	Part No.	Description	Color Code	Wt. per 100	Bag Qty	Box Qty	Box Weight	List Price
	FC250/500	1/4” Barbed Coupling (500/bag)	Black	0.14 lbs	500	20,000	30 lbs	$0.14 ea.
	FBB250HD/500	1/4” Heavy Duty Adapter (barb x barb) (500/bag)	Black	0.12 lbs	500	20,000	25 lbs	$0.15 ea.
	FGP2/1000	Dual Goof Plug (10/rack) (1,000/bag)	Black	0.11 lbs	1,000	30,000	35 lbs	$0.06 ea.

Micro-Fitting Adapters

	Part No.	Description	Color Code	Wt. per 100	Bag Qty	Box Qty	Box Weight	List Price
	FRBA	1/4” x 1/8” Reducing Barbed Adapter	Black	0.08 lbs	100	3,000	4 lbs	$0.27 ea.
	FBT250	1/4” EZ Turn™ Adapter (barb x thread)	Black	0.15 lbs	100	2,000	4 lbs	$0.27 ea.
	FTT250	1/4” EZ Turn™ Adapter (thread x thread)	Black	0.14 lbs	100	2,000	4 lbs	$0.27 ea.
	FBQT250	1/4” EZ Turn™ Adapter (barb x quick thread)	Black	0.14 lbs	100	2,000	4 lbs	$0.27 ea.

1/2” Crocodile™ Compression Fittings

	Part No.	Description	Color Code	Wt. per 100	Bag Qty	Box Qty	Box Weight	List Price
	FSA700	1/2” Socket Adapter (0.700” to 0.710” OD tubing x 1/2” socket / 3/4” spigot)	Black	1.60 lbs	100	500	9 lbs	$1.34 ea.
	FCA250	Compression Adapter (1/2” slip x 0.250” OD tubing)	Orange	0.60 lbs	100	2,000	13 lbs	$0.42 ea.
	FCA620	Compression Adapter (1/2” slip x 0.620” OD tubing)	Green	0.45 lbs	100	2,000	10 lbs	$0.35 ea.
	FCA700	Compression Adapter (1/2” slip x 0.700” OD tubing)	Black	0.40 lbs	100	2,000	9 lbs	$0.35 ea.
	FCA710	Compression Adapter (1/2” slip x 0.710” OD tubing)	Blue	0.40 lbs	100	2,000	9 lbs	$0.35 ea.
	FCC620	Compression Coupling (fits 0.620” OD tubing)	Green	3.00 lbs	25	1,000	32 lbs	$1.13 ea.
	FCC700	Compression Coupling (fits 0.700” OD tubing)	Black	2.90 lbs	25	1,000	31 lbs	$1.13 ea.
	FCC710	Compression Coupling (fits 0.710” OD tubing)	Blue	2.90 lbs	25	1,000	31 lbs	$1.13 ea.
	FRCC67	Reducing Coupling (from 0.620” to 0.700” OD tubing)	Green	2.90 lbs	25	1,000	31 lbs	$1.18 ea.
	FRCC671	Reducing Coupling (from 0.620” to 0.710” OD tubing)	Green	2.90 lbs	25	1,000	31 lbs	$1.18 ea.
	FRCC771	Reducing Coupling (from 0.700” to 0.710” OD tubing)	Blue	2.90 lbs	25	1,000	31 lbs	$1.18 ea.
	FCT620	Compression Tee (fits 0.620” OD tubing)	Green	5.00 lbs	15	480	26 lbs	$1.76 ea.
	FCT700	Compression Tee (fits 0.700” OD tubing)	Black	4.80 lbs	15	480	25 lbs	$1.76 ea.
	FCT710	Compression Tee (fits 0.710” OD tubing)	Blue	4.80 lbs	15	480	25 lbs	$1.76 ea.
	FCEL620	Compression Elbow (fits 0.620” OD tubing)	Green	3.60 lbs	25	800	31 lbs	$1.63 ea.
	FCEL700	Compression Elbow (fits 0.700” OD tubing)	Black	3.50 lbs	25	800	30 lbs	$1.63 ea.
	FCEL710	Compression Elbow (fits 0.710” OD tubing)	Blue	3.50 lbs	25	800	30 lbs	$1.63 ea.

1/2” Crocodile™ Compression Fittings

	Part No.	Description	Color Code	Wt. per 100	Bag Qty	Box Qty	Box Weight	List Price
	FCEP620	Compression End Plug w/ unscrewing cap (0.620” OD tubing)	Green	4.00 lbs	25	800	34 lbs	$1.87 ea.
	FCEP700	Compression End Plug w/ unscrewing cap (0.700” OD tubing)	Black	4.00 lbs	25	800	34 lbs	$1.87 ea.
	FCEP710	Compression End Plug w/ unscrewing cap (0.710” OD tubing)	Blue	4.00 lbs	25	800	34 lbs	$1.87 ea.
	FCSAW620	3/4” FHT Swivel Adapter w/ washer (0.620” OD tubing)	Green	3.40 lbs	25	800	29 lbs	$1.87 ea.
	FCSAW700	3/4” FHT Swivel Adapter w/ washer (0.700” OD tubing)	Black	3.30 lbs	25	800	28 lbs	$1.87 ea.
	FCSAW710	3/4” FHT Swivel Adapter w/ washer (0.710” OD tubing)	Blue	3.30 lbs	25	800	28 lbs	$1.87 ea.
	FCSA620	3/4” FHT Swivel Adapter w/ screen (0.620” OD tubing)	Green	3.70 lbs	25	800	31 lbs	$2.30 ea.
	FCSA700	3/4” FHT Swivel Adapter w/ screen (0.700” OD tubing)	Black	3.60 lbs	25	800	31 lbs	$2.30 ea.
	FCSA710	3/4” FHT Swivel Adapter w/ screen (0.710” OD tubing)	Blue	3.60 lbs	25	800	31 lbs	$2.30 ea.
	FCSAPW620	3/4” FIPT Swivel Adapter w/ washer (0.620” OD tubing)	Green/ Navy	3.40 lbs	25	800	29 lbs	$2.10 ea.
	FCSAPW700	3/4” FIPT Swivel Adapter w/ washer (0.700” OD tubing)	Black/ Navy	3.30 lbs	25	800	28 lbs	$2.10 ea.
	FCSAPW710	3/4” FIPT Swivel Adapter w/ washer (0.710” OD tubing)	Blue/ Navy	3.30 lbs	25	800	28 lbs	$2.10 ea.
	FCSTW620	3/4” FHT Swivel Tee w/ washer (0.620” OD tubing)	Green	5.70 lbs	15	480	29 lbs	$2.20 ea.
	FCSTW700	3/4” FHT Swivel Tee w/ washer (0.700” OD tubing)	Black	5.60 lbs	15	480	29 lbs	$2.20 ea.
	FCSTW710	3/4” FHT Swivel Tee w/ washer (0.710” OD tubing)	Blue	5.60 lbs	15	480	29 lbs	$2.20 ea.

1/2” Crocodile™ Compression Fittings

	Part No.	Description	Color Code	Wt. per 100	Bag Qty	Box Qty	Box Weight	List Price
	FCST620	3/4” FHT Swivel Tee w/ screen (0.620” OD tubing)	Green	6.00 lbs	15	480	31 lbs	$2.70 ea.
	FCST700	3/4” FHT Swivel Tee w/ screen (0.700” OD tubing)	Black	5.90 lbs	15	480	30 lbs	$2.70 ea.
	FCST710	3/4” FHT Swivel Tee w/ screen (0.710” OD tubing)	Blue	5.90 lbs	15	480	30 lbs	$2.70 ea.
	FCSLW620	3/4” FHT Swivel Elbow w/ washer (0.620” OD tubing)	Green	4.30 lbs	25	500	23 lbs	$2.19 ea.
	FCSLW700	3/4” FHT Swivel Elbow w/ washer (0.700” OD tubing)	Black	4.20 lbs	25	500	23 lbs	$2.19 ea.
	FCSLW710	3/4” FHT Swivel Elbow w/ washer (0.710” OD tubing)	Blue	4.20 lbs	25	500	23 lbs	$2.19 ea.
	FCSL620	3/4” FHT Swivel Elbow w/ screen (0.620” OD tubing)	Green	4.50 lbs	25	500	25 lbs	$2.70 ea.
	FCSL700	3/4” FHT Swivel Elbow w/ screen (0.700” OD tubing)	Black	4.40 lbs	25	500	24 lbs	$2.70 ea.
	FCSL710	3/4” FHT Swivel Elbow w/ screen (0.710” OD tubing)	Blue	4.40 lbs	25	500	24 lbs	$2.70 ea.
	FCMAH620	3/4” MHT Adapter (fits 0.620” OD tubing)	Green	2.20 lbs	50	1,000	24 lbs	$1.00 ea.
	FCMAH700	3/4” MHT Adapter (fits 0.700” OD tubing)	Black	2.20 lbs	50	1,000	24 lbs	$1.00 ea.
	FCMAH710	3/4” MHT Adapter (fits 0.710” OD tubing)	Blue	2.20 lbs	50	1,000	24 lbs	$1.00 ea.
	FCMAP620	3/4” MIPT Adapter (fits 0.620” OD tubing)	Green	2.20 lbs	50	1,000	24 lbs	$1.00 ea.
	FCMAP700	3/4” MIPT Adapter (fits 0.700” OD tubing)	Black	2.20 lbs	50	1,000	24 lbs	$1.00 ea.
	FCMAP710	3/4” MIPT Adapter (fits 0.710” OD tubing)	Blue	2.20 lbs	50	1,000	24 lbs	$1.00 ea.

3/4” Crocodile™ Compression Fittings

	Part No.	Description	Color Code	Wt. per 100	Bag Qty	Box Qty	Box Weight	List Price
	FCA900	Compression Adapter (3/4” slip x 0.940” OD tubing)	Grey	0.80 lbs	100	1,000	10 lbs	$0.63 ea.
	FCC900	Compression Coupling (fits 0.940” OD tubing)	Grey	5.70 lbs	25	500	30 lbs	$1.80 ea.
	FRCC970	Reducing Coupling (from 0.700” to 0.940” OD tubing)	Grey	4.10 lbs	25	500	22 lbs	$1.90 ea.
	FRCC971	Reducing Coupling (from 0.710” to 0.940” OD tubing)	Grey	4.10 lbs	25	500	22 lbs	$1.90 ea.
	FCT900	Compression Tee (fits 0.940” OD tubing)	Grey	8.40 lbs	25	300	27 lbs	$3.17 ea.
	FRCT997	Reducing Compression Tee (from 0.940” to 0.700” OD tubing)	Grey/ Black	7.50 lbs	25	300	24 lbs	$3.17 ea.
	FCEL900	Compression Elbow (fits 0.940” OD tubing)	Grey	5.90 lbs	25	500	31 lbs	$2.27 ea.
	FCEP900	Compression End Plug with unscrewing cap (fits 0.940” OD tubing)	Grey	5.20 lbs	25	600	33 lbs	$2.60 ea.

3/4” Crocodile™ Compression Fittings

	Part No.	Description	Color Code	Wt. per 100	Bag Qty	Box Qty	Box Weight	List Price
	FCSAW900	3/4” FHT Swivel Adapter with washer (fits 0.940” OD tubing)	Grey	4.50 lbs	25	600	29 lbs	$3.28 ea.
	FCSA900	3/4” FHT Swivel Adapter with screen washer (fits 0.940” OD tubing)	Grey	4.80 lbs	25	600	31 lbs	$3.85 ea.
	FCSTW900	3/4” FHT Swivel Tee with washer (fits 0.940” OD tubing)	Grey	8.00 lbs	25	300	26 lbs	$4.30 ea.
	FCST900	3/4” FHT Swivel Tee with screen washer (fits 0.940” OD tubing)	Grey	8.30 lbs	25	300	27 lbs	$4.85 ea.
	FCMAH900	3/4” MHT Adapter (fits 0.940” OD tubing)	Grey	3.40 lbs	25	700	26 lbs	$1.70 ea.
	FCMAP900	3/4” MIPT Adapter (fits 0.940” OD tubing)	Grey	3.40 lbs	25	700	26 lbs	$1.70 ea.

Quick Lock™ Fittings Selection Chart

Series	Tubing Nominal Size	Inside Diameter Range	Wall Thickness Range
550	0.560” ID x 0.660” OD (17 mm)	0.520” to 0.600” (13.2 mm to 15.2 mm)	0.040” to 0.050” (1.02 mm to 1.27 mm)
600	0.600” ID x 0.700” OD (18 mm)	0.590” to 0.630” (15.0 mm to 16.0 mm)	0.040” to 0.050” (1.02 mm to 1.27 mm)
700	0.720” ID x 0.820” OD (20 mm)	0.700” to 0.740” (17.8 mm to 18.8 mm)	0.045” to 0.055” (1.14 mm to 1.40 mm)
800	0.820” ID x 0.940” OD (3/4”)	0.800” to 0.840” (20.3 mm to 21.3 mm)	0.055” to 0.065” (1.40 mm to 1.65 mm)
1000	1.060” ID x 1.200” OD (1”)	1.035” to 1.085” (26.3 mm to 27.6 mm)	0.065” to 0.075” (1.65 mm to 1.90 mm)

Quick Lock™ Fittings

	Part No.	Description	Color Code	Wt. per 100	Bag Qty	Box Qty	Box Weight	List Price
	FQLC550	550 Quick Lock™ Coupling	Black	5.20 lbs	25	600	34 lbs	$1.55 ea.
	FQLC600	600 Quick Lock™ Coupling	Black	6.00 lbs	100	800	50 lbs	$1.45 ea.
	FQLC700	700 Quick Lock™ Coupling	Black	8.20 lbs	100	600	50 lbs	$1.95 ea.
	FQLC800	800 Quick Lock™ Coupling	Black	9.60 lbs	50	500	50 lbs	$3.70 ea.
	FQLC1000	1000 Quick Lock™ Coupling	Black	15.60 lbs	50	300	49 lbs	$4.70 ea.
	FQLT550	550 Quick Lock™ Tee	Black	8.40 lbs	15	240	23 lbs	$3.75 ea.
	FQLT600	600 Quick Lock™ Tee	Black	8.60 lbs	50	400	37 lbs	$3.45 ea.
	FQLT700	700 Quick Lock™ Tee	Black	11.00 lbs	50	300	35 lbs	$3.75 ea.
	FQLT800	800 Quick Lock™ Tee	Black	13.60 lbs	25	250	36 lbs	$9.30 ea.
	FQLT1000	1000 Quick Lock™ Tee	Black	22.50 lbs	25	150	36 lbs	$12.00 ea.
	FQLL550	550 Quick Lock™ Elbow	Black	5.80 lbs	25	400	27 lbs	$3.60 ea.
	FQLL600	600 Quick Lock™ Elbow	Black	6.00 lbs	50	600	38 lbs	$3.36 ea.
	FQLL700	700 Quick Lock™ Elbow	Black	7.00 lbs	50	500	37 lbs	$5.90 ea.
	FQLL800	800 Quick Lock™ Elbow	Black	9.60 lbs	50	300	31 lbs	$12.40 ea.
	FQLST550-5	550 Quick Lock™ x 1/2” FIPT Swivel Tee	Black	8.20 lbs	15	240	21 lbs	$4.10 ea.

Quick Lock™ Fittings

	Part No.	Description	Color Code	Wt. per 100	Bag Qty	Box Qty	Box Weight	List Price
	FQLSTW600	600 Quick Lock™ x 3/4" FHT Swivel Tee with washer	Black	8.60 lbs	50	400	36 lbs	$3.70 ea.
	FQLSTW700	700 Quick Lock™ x 3/4" FHT Swivel Tee with washer	Black	10.40 lbs	50	300	33 lbs	$4.25 ea.
	FQLSTW800	800 Quick Lock™ x 3/4" FHT Swivel Tee with washer	Black	12.20 lbs	25	300	39 lbs	$8.50 ea.
	FQLSTW1000	1000 Quick Lock™ x 3/4" FHT Swivel Tee with washer	Black	17.30 lbs	25	200	37 lbs	$12.10 ea.
	FQLST600	600 Quick Lock™ x 3/4" FHT Swivel Tee with screen washer	Black	8.80 lbs	50	400	37 lbs	$4.10 ea.
	FQLST700	700 Quick Lock™ x 3/4" FHT Swivel Tee with screen washer	Black	10.60 lbs	50	300	34 lbs	$4.60 ea.
	FQLST800	800 Quick Lock™ x 3/4" FHT Swivel Tee with screen washer	Black	12.40 lbs	25	300	39 lbs	$8.85 ea.
	FQLST1000	1000 Quick Lock™ x 3/4" FHT Swivel Tee with screen washer	Black	17.50 lbs	25	200	37 lbs	$12.50 ea.
NEW	FQLMAP550-5	550 Quick Lock™ x 1/2" MIPT Adapter	Black	4.70 lbs	100	800	39 lbs	$1.94 ea.
	FQLMAP600-5	600 Quick Lock™ x 1/2" MIPT Adapter	Black	4.90 lbs	100	800	41 lbs	$1.80 ea.
	FQLMAP700-5	700 Quick Lock™ x 1/2" MIPT Adapter	Black	5.70 lbs	100	600	36 lbs	$2.00 ea.
	FQLMAP800-5	800 Quick Lock™ x 1/2" MIPT Adapter	Black	6.00 lbs	50	600	38 lbs	$3.60 ea.
NEW	FQLMAP550	550 Quick Lock™ x 3/4" MIPT Adapter	Black	5.60 lbs	100	800	46 lbs	$1.94 ea.
	FQLMAP600	600 Quick Lock™ x 3/4" MIPT Adapter	Black	5.80 lbs	100	800	48 lbs	$1.80 ea.
	FQLMAP700	700 Quick Lock™ x 3/4" MIPT Adapter	Black	6.60 lbs	100	600	41 lbs	$2.00 ea.
	FQLMAP800	800 Quick Lock™ x 3/4" MIPT Adapter	Black	7.00 lbs	50	600	44 lbs	$3.60 ea.
	FQLMAH550	550 Quick Lock™ x 3/4" MHT Adapter	Black	3.90 lbs	25	700	27 lbs	$1.75 ea.
	FQLMAH600	600 Quick Lock™ x 3/4" MHT Adapter	Black	4.10 lbs	100	800	35 lbs	$1.60 ea.
	FQLMAH700	700 Quick Lock™ x 3/4" MHT Adapter	Black	5.00 lbs	100	600	32 lbs	$2.00 ea.
	FQLMAH800	800 Quick Lock™ x 3/4" MHT Adapter	Black	6.90 lbs	50	600	44 lbs	$3.60 ea.

Quick Lock™ Fittings

	Part No.	Description	Color Code	Wt. per 100	Bag Qty	Box Qty	Box Weight	List Price
	FQLEP550	550 Quick Lock™ End Plug with unscrewing cap	Black	5.80 lbs	25	600	36 lbs	$2.70 ea.
	FQLEP600	600 Quick Lock™ End Plug with unscrewing cap	Black	6.00 lbs	100	800	50 lbs	$2.56 ea.
	FQLEP700	700 Quick Lock™ End Plug with unscrewing cap	Black	7.10 lbs	100	600	45 lbs	$2.92 ea.
	FQLEP800	800 Quick Lock™ End Plug with unscrewing cap	Black	9.00 lbs	50	600	51 lbs	$4.50 ea.
	FQLSAW550	550 Quick Lock™ x 3/4" FHT Swivel Adapter with washer	Black	5.00 lbs	25	500	27 lbs	$2.90 ea.
	FQLSAW600	600 Quick Lock™ x 3/4" FHT Swivel Adapter with washer	Black	5.60 lbs	100	800	47 lbs	$2.70 ea.
	FQLSAW700	700 Quick Lock™ x 3/4" FHT Swivel Adapter with washer	Black	6.70 lbs	100	600	42 lbs	$2.95 ea.
	FQLSAW800	800 Quick Lock™ x 3/4" FHT Swivel Adapter with washer	Black	7.90 lbs	50	600	49 lbs	$5.00 ea.
	FQLSA550	550 Quick Lock™ x 3/4" FHT Swivel Adapter with screen	Black	5.20 lbs	25	500	28 lbs	$3.35 ea.
	FQLSA600	600 Quick Lock™ x 3/4" FHT Swivel Adapter with screen	Black	5.80 lbs	100	800	48 lbs	$3.10 ea.
	FQLSA700	700 Quick Lock™ x 3/4" FHT Swivel Adapter with screen	Black	6.90 lbs	100	600	44 lbs	$3.35 ea.
	FQLSA800	800 Quick Lock™ x 3/4" FHT Swivel Adapter with screen	Black	8.10 lbs	50	600	50 lbs	$5.30 ea.
NEW	FQLA550	550 Quick Lock™ x 1/2" Socket / 3/4" Spigot	Black	3.40 lbs	50	300	11 lbs	$1.70 ea.
	FQLA600	600 Quick Lock™ x 1/2" Socket / 3/4" Spigot	Black	3.60 lbs	50	300	12 lbs	$1.60 ea.
	FQLA700	700 Quick Lock™ x 1/2" Socket / 3/4" Spigot	Black	4.40 lbs	50	300	14 lbs	$1.75 ea.
	FQLA800	800 Quick Lock™ x 1/2" Socket / 3/4" Spigot	Black	4.70 lbs		300	15 lbs	$2.28 ea.

17 mm Insert Fittings

	Part No.	Description	Color Code	Wt. per 100	Bag Qty	Box Qty	Box Weight	List Price
	FIC17	17 mm Insert Barbed Coupling (fits 0.540” to 0.580” ID tubing)	Brown	0.95 lbs	100	1,000	11 lbs	$0.41 ea.
	FIT17	17 mm Insert Barbed Tee (fits 0.540” to 0.580” ID tubing)	Brown	1.40 lbs	50	600	10 lbs	$0.60 ea.
	FIEL17	17 mm Insert Barbed Elbow (fits 0.540” to 0.580” ID tubing)	Brown	1.15 lbs	50	600	8 lbs	$0.60 ea.
	FIX17	17 mm Insert Barbed Cross (fits 0.540” to 0.580” ID tubing)	Brown	2.00 lbs	50	400	9 lbs	$1.33 ea.
	FIMA1750	1/2” MIPT Adapter x 17 mm Insert Barb (fits 0.540” to 0.580” ID tubing)	Brown	1.65 lbs	50	600	11 lbs	$0.80 ea.
	FIMA1775	3/4” MIPT Adapter x 17 mm Insert Barb (fits 0.540” to 0.580” ID tubing)	Brown	2.80 lbs	50	400	12 lbs	$0.87 ea.
	FITT1750	1/2” MIPT x 17 mm Insert x 17 mm Insert Barbed Tee (fits 0.540” to 0.580” ID tubing)	Brown	2.00 lbs	50	400	9 lbs	$1.07 ea.

18 mm Insert Fittings

	Part No.	Description	Color Code	Wt. per 100	Bag Qty	Box Qty	Box Weight	List Price
	FIC18	18 mm Insert Barbed Coupling (fits 0.600” to 0.620” ID tubing)	Black	0.95 lbs	100	1,000	11 lbs	$0.44 ea.
	FIT18	18 mm Insert Barbed Tee (fits 0.600” to 0.620” ID tubing)	Black	1.40 lbs	50	600	10 lbs	$0.64 ea.
	FIEL18	18 mm Insert Barbed Elbow (fits 0.600” to 0.620” ID tubing)	Black	1.15 lbs	50	600	8 lbs	$0.64 ea.
	FIX18	18 mm Insert Barbed Cross (fits 0.600” to 0.620” ID tubing)	Black	2.00 lbs	50	400	9 lbs	$1.48 ea.
	FIMA1850	1/2” MIPT Adapter x 18 mm Insert Barb (fits 0.600” to 0.620” ID tubing)	Black	1.65 lbs	50	400	8 lbs	$0.88 ea.
	FIMA1875	3/4” MIPT Adapter x 18 mm Insert Barb (fits 0.600” to 0.620” ID tubing)	Black	2.80 lbs	50	400	12 lbs	$0.98 ea.
	FITT1850	1/2” MIPT x 18 mm Insert x 18 mm Insert Barbed Tee (fits 0.600” to 0.620” ID tubing)	Black	2.00 lbs	50	400	11 lbs	$1.18 ea.

Swivel-Flex™ Swing Joint Fittings

	Part No.	Description	Color Code	Wt. per 100	Bag Qty	Box Qty	Box Weight	List Price
	FSJL50	1/2” MIPT x Swivel Barb Swing Joint Elbow	Black	3.40 lbs	50	500	18 lbs	$1.03 ea.
	FSJL75	3/4” MIPT x Swivel Barb Swing Joint Elbow	Black	3.80 lbs	50	400	17 lbs	$1.34 ea.
	Note: Swivel-Flex™ swing joint fittings fit 0.490” to 0.500” ID Swing Riser Pipe.							

Funny Pipe Fittings

	Part No.	Description	Color Code	Wt. per 100	Bag Qty	Box Qty	Box Weight	List Price
	FFPC	Funny Pipe Coupling	Black	1.30 lbs	100	1,000	14 lbs	$0.80 ea.
	FFPML50	1/2” MIPT Funny Pipe Elbow	Black	2.10 lbs	50	1,000	22 lbs	$0.49 ea.
	FFPML75	3/4” MIPT Funny Pipe Elbow	Black	2.80 lbs	50	800	24 lbs	$0.57 ea.
	FFPMA50	1/2” MIPT Funny Pipe Adapter	Black	1.50 lbs	50	1,000	16 lbs	$0.80 ea.
	FFPMA75	3/4” MIPT Funny Pipe Adapter	Black	2.00 lbs	50	800	17 lbs	$0.80 ea.
	FFPT	Funny Pipe Tee	Black	1.80 lbs	50	500	10 lbs	$1.20 ea.
	Note: Spiral barbs for above products fit 0.490” to 0.500” ID Swing Riser Pipe.							
	FFPSL50	1/2” Funny Pipe Marlex Street Elbow (1/2” FIPT x 1/2” MIPT)	Black	3.60 lbs	50	1,000	37 lbs	$0.60 ea.
	FFPSL75	3/4” Funny Pipe Marlex Street Elbow (3/4” FIPT x 3/4” MIPT)	Black	5.00 lbs	50	800	41 lbs	$0.85 ea.

Swivel-Flex™ Double Swing Joint Assemblies

Part No.	Description	Color Code	Wt. per 100	Bag Qty	Box Qty	Box Weight	List Price
FSJR650	1/2” MIPT x 6” Swivel-Flex™ Double Swing Joint	Black	10.8 lbs	N/A	250	28 lbs	$3.40 ea.
FSJR1250	1/2” MIPT x 12” Swivel-Flex™ Double Swing Joint	Black	14.9 lbs	N/A	125	20 lbs	$3.70 ea.
FSJR675	3/4” MIPT x 6” Swivel-Flex™ Double Swing Joint	Black	11.6 lbs	N/A	250	30 lbs	$4.10 ea. (MTO)
FSJR1275	3/4” MIPT x 12” Swivel-Flex™ Double Swing Joint	Black	15.7 lbs	N/A	125	21 lbs	$4.30 ea.
FSJR657	3/4” MIPT x 1/2” MIPT x 6” Swivel-Flex™ Double Swing Joint	Black	11.2 lbs	N/A	250	29 lbs	$3.85 ea. (MTO)
FSJR1257	3/4” MIPT x 1/2” MIPT x 12” Swivel-Flex™ Double Swing Joint	Black	15.3 lbs	N/A	125	20 lbs	$4.05 ea. (MTO)

Funny Pipe Single Swing Joint Assemblies

Part No.	Description	Color Code	Wt. per 100	Bag Qty	Box Qty	Box Weight	List Price
FFPSR650	1/2” MIPT x 6” Single Swing Joint Assembly	Black	11.1 lbs	N/A	250	29 lbs	$2.30 ea.
FFPSR1250	1/2” MIPT x 12” Single Swing Joint Assembly	Black	15.2 lbs	N/A	125	20 lbs	$2.95 ea.
FFPSR675	3/4” MIPT x 6” Single Swing Joint Assembly	Black	14.0 lbs	N/A	250	36 lbs	$2.74 ea. (MTO)
FFPSR1275	3/4” MIPT x 12” Single Swing Joint Assembly	Black	18.1 lbs	N/A	125	24 lbs	$3.42 ea.
FFPSR657	3/4” MIPT x 1/2” MIPT x 6” Single Swing Joint Assembly	Black	12.6 lbs	N/A	250	33 lbs	$2.54 ea. (MTO)
FFPSR1257	3/4” MIPT x 1/2” MIPT x 12” Single Swing Joint Assembly	Black	17.7 lbs	N/A	125	23 lbs	$3.24 ea. (MTO)

Y-Filters

	Part No.	Description	Color Code	Wt. per 100	Bag Qty	Box Qty	Box Weight	List Price
	FYF75	3/4" MIPT Y-Filter with 150 Mesh Polyester Screen (10 gpm, 75 psi max)	Black	38.0 lbs	N/A	50	21 lbs	$20.50 ea.
	FYFS75	3/4" MIPT Y-Filter with 150 Mesh Stainless Steel Screen (10 gpm, 75 psi max)	Black	38.0 lbs	N/A	50	21 lbs	$25.85 ea.
	FYF100	1" MIPT Y-Filter with 150 Mesh Polyester Screen (10 gpm, 75 psi max)	Black	40.0 lbs	N/A	40	18 lbs	$24.50 ea.
	FYFS100	1" MIPT Y-Filter with 150 Mesh Stainless Steel Screen (10 gpm, 75 psi max)	Black	40.0 lbs	N/A	40	18 lbs	$29.95 ea.
	FYF75V	3/4" MIPT Y-Filter with 150 Mesh Polyester Screen and Valve (10 gpm, 75 psi max)	Black	40.0 lbs	N/A	25	12 lbs	$24.50 ea.
	FYFS75V	3/4" MIPT Y-Filter with 150 Mesh Stainless Steel Screen and Valve (10 gpm, 75 psi max)	Black	40.0 lbs	N/A	25	12 lbs	$29.95 ea.
	FYF100V	1" MIPT Y-Filter with 150 Mesh Polyester Screen and Valve (10 gpm, 75 psi max)	Black	42.0 lbs	N/A	25	13 lbs	$28.75 ea.
	FYFS100V	1" MIPT Y-Filter with 150 Mesh Stainless Steel Screen and Valve (10 gpm, 75 psi max)	Black	42.0 lbs	N/A	25	13 lbs	$33.90 ea.
	FYFH75	3/4" Hose Thread Y-Filter with 150 Mesh Polyester Screen (3/4" FHT Swivel x 3/4" MHT, 10 gpm, 75 psi max)	Black	39.0 lbs	N/A	25	12 lbs	$23.25 ea.

Inline Filter

	Part No.	Description	Color Code	Wt. per 100	Bag Qty	Box Qty	Box Weight	List Price
	FILF75	3/4” Hose Thread Inline Filter w/ 120 Mesh Polyester Screen (3/4” FHT x 3/4” MHT, 5 gpm max, 75 psi max)	Black	12.1 lbs	10	50	7 lbs	$14.00 ea.

Pressure Regulating Filters

	Part No.	Description	Color Code	Wt. per 100	Bag Qty	Box Qty	Box Weight	List Price
	FPRF75	3/4”, 25 psi Pressure Regulating Filter (3/4” MIPT, 0.2 - 5 gpm, 75 psi max, 200 Mesh Stainless Steel Screen)	Black	25.0 lbs	N/A	25	7 lbs	$42.25 ea.
	FPRF100	1”, 45 psi Pressure Regulating Filter (1” MIPT, 0.2 - 10 gpm, 75 psi max, 200 Mesh Stainless Steel Screen)	Black	30.0 lbs	N/A	25	9 lbs	$47.25 ea.

Y-Filter Replacement Parts

	Part No.	Description	Color Code	Wt. per 100	Bag Qty	Box Qty	Box Weight	List Price
	FSP150	150 Mesh Polyester Screen	Black	2.00 lbs	5	20	1 lbs	$10.50 ea.
	FSS150	150 Mesh Stainless Screen	Black	2.00 lbs	5	20	1 lbs	$16.00 ea.
	(Replacement Screen for Part Nos. FYFS75, FYFS100, FYFS75V, FYFS100V and FYFH75)							
	FOR27	Rubber O-Ring (Replacement O-Ring for Part Nos. FSP150 and FSS150)	Black	0.10 lbs	25	100	1 lbs	$1.00 ea.
	FOR503	Rubber O-Ring (Replacement O-Ring for Y-Filter Body Part Nos. FYF75, FYFS75, FYF100, FYFS100, FYF75V, FYFS75V, FYF100V, FYFS100V, FYFH75)	Black	0.25 lbs	20	100	1 lbs	$1.08 ea.

Pressure Regulators

Part No.	Description	Color Code	Wt. per 100	Bag Qty	Box Qty	Box Weight	List Price
FPR15P	15 psi Senninger Pressure Regulator (3/4" FIPT x 3/4" FIPT, 0.5 - 15 gpm)	Black	39.0 lbs	5	25	11 lbs	$30.00 ea.
FPR20P	20 psi Senninger Pressure Regulator (3/4" FIPT x 3/4" FIPT, 0.5 - 15 gpm)	Black	39.0 lbs	5	25	11 lbs	$30.00 ea.
FPR25P	25 psi Senninger Pressure Regulator (3/4" FIPT x 3/4" FIPT, 0.5 - 15 gpm)	Black	39.0 lbs	5	25	11 lbs	$30.00 ea.
FPR30P	30 psi Senninger Pressure Regulator (3/4" FIPT x 3/4" FIPT, 0.5 - 15 gpm)	Black	39.0 lbs	5	25	11 lbs	$30.00 ea.
FPR40P	40 psi Senninger Pressure Regulator (3/4" FIPT x 3/4" FIPT, 0.5 - 15 gpm)	Black	39.0 lbs	5	25	11 lbs	$30.00 ea.

Part No.	Description	Color Code	Wt. per 100	Bag Qty	Box Qty	Box Weight	List Price
FPR20H	20 psi Senninger Pressure Regulator (3/4" FHT x 3/4" MHT, 0.5 - 7 gpm)	Black	14.8 lbs	10	50	9 lbs	$27.00 ea.
FPR30H	30 psi Senninger Pressure Regulator (3/4" FHT x 3/4" MHT, 0.5 - 7 gpm)	Black	14.8 lbs	10	50	9 lbs	$27.00 ea.

Maximum inlet pressure rating of 150 psi and 100 psi for pipe thread and hose thread regulators, respectively. Pressure regulators must be installed downstream of all shut-off valves.

Drip Zone Kits

Part No.	Description	Color Code	Wt. per 100	Bag Qty	Box Qty	Box Weight	List Price
FDZK2071	Drip Zone Kit with 20 psi Pressure Regulator (fits 0.710" OD tubing)	Black	84.0 lbs	1	50	44 lbs	$53.00 ea.
FDZK3071	Drip Zone Kit with 30 psi Pressure Regulator (fits 0.710" OD tubing)	Black	84.0 lbs	1	50	44 lbs	$53.00 ea.

Kit contains: 1 – 3/4" Y-Filter (FYF75), 1 – 3/4" FIPT x 3/4" FIPT, 0.5 - 15 gpm Pressure Regulator (FPR20P or FPR30P), 1 – 1" MIPT x 3/4" FIPT Reducer Bushing, 1 – 3/4" MIPT Adapter (FCMAP710, fits 0.710" OD tubing)

Full Port High Flow Ball Valves

	Part No.	Description	Wt. per 100	Bag Qty	Box Qty	Box Weight	List Price
	FBVSS	High Flow Solvent Weld Ball Valve (3/4" Socket / 1" Spigot x 3/4" Socket / 1" Spigot)	10.0 lbs	25	300	32 lbs	$5.50 ea.
	FBVSWM	High Flow Ball Valve (3/4" FHT Swivel x 3/4" MHT)	12.8 lbs	25	250	34 lbs	$9.00 ea.
NEW	FBVQL550	High Flow Ball Valve (550 Quick Lock™ x 550 Quick Lock™)	16.0 lbs	25	150	25 lbs	$5.80 ea.
	FBVQL600	High Flow Ball Valve (600 Quick Lock™ x 600 Quick Lock™)	16.5 lbs	25	150	27 lbs	$5.80 ea.
	FBVQL700	High Flow Ball Valve (700 Quick Lock™ x 700 Quick Lock™)	17.5 lbs	25	150	29 lbs	$7.10 ea.
	FBVQL800	High Flow Ball Valve (800 Quick Lock™ x 800 Quick Lock™)	19.5 lbs	25	150	31 lbs	$7.75 ea.
	FBVQL600SW	High Flow Ball Valve (3/4" FHT Swivel x 600 Quick Lock™)	15.9 lbs	25	200	35 lbs	$6.10 ea.
	FBVQL700SW	High Flow Ball Valve (3/4" FHT Swivel x 700 Quick Lock™)	16.3 lbs	25	200	36 lbs	$7.10 ea.
	FBVQL800SW	High Flow Ball Valve (3/4" FHT Swivel x 800 Quick Lock™)	17.2 lbs	25	200	37 lbs	$7.75 ea.
	FBVQL600S	High Flow Ball Valve (3/4" Socket / 1" Spigot x 600 Quick Lock™)	13.2 lbs	25	200	28 lbs	$5.80 ea.
	FBVQL700S	High Flow Ball Valve (3/4" Socket / 1" Spigot x 700 Quick Lock™)	13.7 lbs	25	200	29 lbs	$6.75 ea.
	FBVQL800S	High Flow Ball Valve (3/4" Socket / 1" Spigot x 800 Quick Lock™)	14.6 lbs	25	200	31 lbs	$7.45 ea.

Full Port Flush Ball Valves

Part No.	Description	Wt. per 100	Bag Qty	Box Qty	Box Weight	List Price
FFVQL600	High Flow Flush Ball Valve (600 Quick Lock™ x 3/4" MHT)	13.3 lbs	25	200	29 lbs	$6.10 ea.
FFVQL700	High Flow Flush Ball Valve (700 Quick Lock™ x 3/4" MHT)	13.8 lbs	25	200	30 lbs	$7.05 ea.
FFVQL800	High Flow Flush Ball Valve (800 Quick Lock™ x 3/4" MHT)	14.7 lbs	25	150	24 lbs	$7.75 ea.

Dual Line Full Port Flush "Y" Ball Valves

Part No.	Description	Wt. per 100	Bag Qty	Box Qty	Box Weight	List Price
FFYVQL600	Dual Line High Flow Flush "Y" Ball Valve (Dual 600 Quick Lock™ x 3/4" MHT)	21.0 lbs	10	100	24 lbs	$12.00 ea.
FFYVQL700	Dual Line High Flow Flush "Y" Ball Valve (Dual 700 Quick Lock™ x 3/4" MHT)	22.0 lbs	10	100	25 lbs	$12.00 ea.

Dual Line Full Port Starter "Y" Ball Valves

Part No.	Description	Wt. per 100	Bag Qty	Box Qty	Box Weight	List Price
FSYVQL600	Dual Line High Flow Starter "Y" Ball Valve (3/4" FHT Swivel x Dual 600 Quick Lock™)	24.0 lbs	10	100	26 lbs	$12.50 ea.
FSYVQL700	Dual Line High Flow Starter "Y" Ball Valve (3/4" FHT Swivel x Dual 700 Quick Lock™)	25.0 lbs	10	100	27 lbs	$12.50 ea.

Note: Other combinations/assemblies available. Please call for pricing and availability.

Ball Valves

	Part No.	Description	Color Code	Wt. per 100	Bag Qty	Box Qty	Box Weight	List Price
	FBV75	3/4” Ball Valve (3/4” FHT x 3/4” MHT, 75 psi max)	Black	5.40 lbs	25	150	9 lbs	$3.45 ea.
	FBV75/100	3/4” Ball Valve (3/4” FHT x 3/4” MHT, 75 psi max)	Black	5.40 lbs	100	800	45 lbs	$3.28 ea.
	FBV75B	3/4” Ball Valve (3/4” FHT x 3/4” MHT, 75 psi max)	Black	5.40 lbs	N/A	800	45 lbs	$3.20 ea.
	FBV75S	3/4” Ball Valve (3/4” FHT Swivel x 3/4” MHT, 75 psi max)	Black	6.10 lbs	25	150	10 lbs	$4.12 ea.
	FBV75S/100	3/4” Ball Valve (3/4” FHT Swivel x 3/4” MHT, 75 psi max)	Black	6.10 lbs	100	700	45 lbs	$3.93 ea.
	FBV75SB	3/4” Ball Valve (3/4” FHT Swivel x 3/4” MHT, 75 psi max)	Black	6.10 lbs	N/A	700	45 lbs	$3.86 ea.
	FYBV75	3/4” Y-Ball Valve (3/4” FHT Inlet x 3/4” MHT Outlets, 75 psi max)	Black	8.00 lbs	15	75	7 lbs	$5.35 ea.

Micro-Valves

	Part No.	Description	Color Code	Wt. per 100	Bag Qty	Box Qty	Box Weight	List Price
	FVB250	1/4” Flow Controlling Valve (barb x barb)	Black	0.50 lbs	50	500	4 lbs	$1.60 ea.
	FVT250	1/4” Flow Controlling Valve (thread x thread)	Black	0.50 lbs	50	500	4 lbs	$1.60 ea.

Flow Controlling Valves

	Part No.	Description	Color Code	Wt. per 100	Bag Qty	Box Qty	Box Weight	List Price
	FIV17	17 mm Insert Flow Controlling Valve (fits 0.540” to 0.580” ID tubing)	Brown	4.20 lbs	25	200	10 lbs	$4.80 ea.
	FIV18	18 mm Insert Flow Controlling Valve (fits 0.600” to 0.620” ID tubing)	Black	4.20 lbs	25	200	10 lbs	$5.10 ea.
	FCV620	1/2” Compression Flow Controlling Valve (fits 0.620” OD tubing)	Green	6.10 lbs	15	150	10 lbs	$3.33 ea.
	FCV700	1/2” Compression Flow Controlling Valve (fits 0.700” OD tubing)	Black	5.90 lbs	15	150	10 lbs	$3.33 ea.
	FCV710	1/2” Compression Flow Controlling Valve (fits 0.710” OD tubing)	Blue	5.90 lbs	15	150	10 lbs	$3.33 ea.
	FCV900	3/4” Compression Flow Controlling Valve (fits 0.940” OD tubing)	Grey	8.40 lbs	25	125	12 lbs	$4.00 ea.

Riser Leads for Jets

	Part No.	Description	Color Code	Wt. per 100	Bundle Qty	Box Qty	Box Weight	List Price
	TFT24P	24” Polyethylene Riser Lead for Jets w/ 1/4” Barbed Adapter (0.160” ID x 0.245” OD)	Black	2.30 lbs	100	1,000	23 lbs	$0.77 ea.
	TFT30P	30” Polyethylene Riser Lead for Jets w/ 1/4” Barbed Adapter (0.160” ID x 0.245” OD)	Black	2.80 lbs	100	1,000	29 lbs	$0.82 ea.
	TFT36P	36” Polyethylene Riser Lead for Jets w/ 1/4” Barbed Adapter (0.160” ID x 0.245” OD)	Black	3.30 lbs	100	1,000	35 lbs	$0.87 ea.

Note: Other lengths and dimensions available upon request.

Plastic Stakes

	Part No.	Description	Color Code	Wt. per 100	Bag Qty	Box Qty	Box Weight	List Price
NEW	FS4	4” Plastic Support Stake (fits 0.185”, 0.220” and 0.250” OD tubing)	Black	0.50 lbs	100	2,000	11 lbs	$0.29 ea.
NEW	FSC45	4.5” Plastic Support C-Stake (fits 0.185”, 0.220” and 0.250” OD tubing) *Available Summer 2024	Black	0.30lbs	100	2,000	8 lbs	$0.49 ea.
	FS6	6” Plastic Support Stake (fits 0.185”, 0.220”, 0.250” and 0.300” OD tubing)	Black	1.05 lbs	100	2,000	23 lbs	$0.30 ea.
	FSJ6	6” Cleated Plastic J-Stake (holds down 0.620” to 0.710” OD tubing)	Black	2.90 lbs	50	400	13 lbs	$0.83 ea.
	FRRS8	8” Plastic Rigid Riser Stake (with 1/4” barbed side inlet)	Black	2.42 lbs	50	400	11 lbs	$1.01 ea.
	FS9	9” Plastic Stake (accepts 0.245” to 0.250” OD tubing)	Black	4.90 lbs	N/A	400	21 lbs	$0.83 ea.
	FS13	13” Plastic Stake (accepts 0.300” OD rigid riser and 0.245” to 0.270” OD tubing)	Black	5.30 lbs	N/A	400	23 lbs	$1.00 ea.

Wire Stakes

Part No.	Description	Color Code	Wt. per 100	Bag Qty	Box Qty	Box Weight	List Price
FSU4	4” Galvanized Wire U-Stake, 14 gauge (for 1/4” tubing)	Silver	1.10 lbs	50	2,000	23 lbs	$0.42 ea.
FSU6	6” Non-Galvanized Wire U-Stake, 11 gauge (1/2” & 3/4” tubing)	Grey	3.90 lbs	100	1,000	40 lbs	$0.38 ea.
FSU6B	6” Non-Galvanized Wire U-Stake, 11 gauge (1/2” & 3/4” tubing)	Grey	3.90 lbs	N/A	1,000	40 lbs	$0.29 ea.
FSU6GB	6” Galvanized Wire U-Stake, 11 gauge (1/2” & 3/4” tubing)	Silver	3.90 lbs	N/A	1,000	40 lbs	$0.40 ea.
FSU8GB	8” Galvanized Wire U-Stake, 12 gauge (1/2” & 3/4” tubing)	Silver	4.10 lbs	N/A	500	25 lbs	$0.46 ea.
FSDU6	6” Galvanized Wire U-Stake with Dimple, 11 gauge (1/2” & 3/4” tubing)	Silver	3.90 lbs	100	1,000	40 lbs	$0.53 ea.
FSDU6B	6” Galvanized Wire U-Stake with Dimple, 11 gauge (1/2” & 3/4” tubing)	Silver	3.90 lbs	N/A	1,000	40 lbs	$0.36 ea.
FSDU8B	8” Galvanized Wire U-Stake with Dimple, 11 gauge (1/2” & 3/4” tubing)	Silver	4.70 lbs	N/A	1,000	48 lbs	$0.43 ea.
FSJ5	5” Galvanized Wire J-Stake, 14 gauge (for 1/4” tubing)	Silver	1.05 lbs	100	2,000	21 lbs	$0.35 ea.
FSJ8	8” Galvanized Wire J-Stake, 12 gauge (1/2” & 3/4” tubing)	Silver	2.50 lbs	100	1,000	26 lbs	$0.40 ea.
FSJ8B	8” Galvanized Wire J-Stake, 12 gauge (1/2” & 3/4” tubing)	Silver	2.50 lbs	N/A	1,000	26 lbs	$0.31 ea.
FS14	14” Galvanized Wire Stabilizer Stake, 11 gauge (for rigid riser assemblies)	Silver	4.70 lbs	50	500	25 lbs	$1.60 ea.

Note: Please call for pricing on quantities greater than 30,000.

Stake Assemblies

	Part No.	Description	Color Code	Wt. per 100	Bag Qty	Box Qty	Box Weight	List Price
	FSA24	Assembly comprising 24” of 1/4” Poly Tubing with 1/4” Connector (FBB250HD) and 13” Stake (FS13)	Black	10.5 lbs	N/A	200	23 lbs	$2.40 ea.
	FSA24-V	Assembly comprising 24” of 1/4” Poly Tubing with 1/4” Connector (FBB250HD), 13” Stake (FS13) and 1/4” Flow Controlling Valve (FVB250)	Black	11.0 lbs	N/A	200	24 lbs	$4.00 ea.
	FSA24-Q	Assembly comprising 24” of 1/4” Poly Tubing with 1/4” Connector (FBB250HD), 13” Stake (FS13) and 90° Adjustable Jet (EAJ90)	Black	11.0 lbs	N/A	200	24 lbs	$4.30 ea.
	FSA24-H	Assembly comprising 24” of 1/4” Poly Tubing with 1/4” Connector (FBB250HD), 13” Stake (FS13) and 180° Adjustable Jet (EAJ180)	Blue	11.0 lbs	N/A	200	24 lbs	$4.30 ea.
	FSA24-F	Assembly comprising 24” of 1/4” Poly Tubing with 1/4” Connector (FBB250HD), 13” Stake (FS13) and 360° Adjustable Jet (EAJ360)	Red	11.0 lbs	N/A	200	24 lbs	$4.30 ea.

Poly Rigid Risers

	Part No.	Description	Color Code	Wt. per 100	Bag Qty	Box Qty	Box Weight	List Price
	TR6	6” Riser (0.160” x 0.300”)	Black	1.05 lbs	100	2,000	22 lbs	$0.26 ea.
	TR8	8” Riser (0.160” x 0.300”)	Black	1.40 lbs	100	1,500	22 lbs	$0.31 ea.
	TR12	12” Riser (0.160” x 0.300”)	Black	2.10 lbs	100	1,000	22 lbs	$0.39 ea.
	TR18	18” Riser (0.160” x 0.300”)	Black	3.15 lbs	100	1,000	33 lbs	$0.54 ea.
	TRA6-B	6” Riser (0.160” x 0.300”) with Barbed Adapter	Black	1.20 lbs	100	2,000	25 lbs	$0.68 ea.
	TRA8-B	8” Riser (0.160” x 0.300”) with Barbed Adapter	Black	1.55 lbs	100	1,500	25 lbs	$0.74 ea.
	TRA12-B	12” Riser (0.160” x 0.300”) with Barbed Adapter	Black	2.25 lbs	100	1,000	25 lbs	$0.81 ea.
	TRA18-B	18” Riser (0.160” x 0.300”) with Barbed Adapter	Black	3.30 lbs	100	1,000	36 lbs	$0.97 ea.
	TRA6-T	6” Riser (0.160” x 0.300”) with Threaded Adapter	Black	1.20 lbs	100	2,000	25 lbs	$0.68 ea.
	TRA8-T	8” Riser (0.160” x 0.300”) with Threaded Adapter	Black	1.55 lbs	100	1,500	25 lbs	$0.74 ea.
	TRA12-T	12” Riser (0.160” x 0.300”) with Threaded Adapter	Black	2.25 lbs	100	1,000	25 lbs	$0.81 ea.
	TRA18-T	18” Riser (0.160” x 0.300”) with Threaded Adapter	Black	3.30 lbs	100	1,000	36 lbs	$0.97 ea.

1/2” Riser Adapters

	Part No.	Description	Color Code	Wt. per 100	Bag Qty	Box Qty	Box Weight	List Price
	FMA50	1/2” Male Adapter for Rigid Riser (1/2” MIPT x Compression Opening to accept 0.160” ID x 0.300” OD Rigid Riser)	Black	0.55 lbs	100	1,000	7 lbs	$0.88 ea.

1/2” Riser Adapters

	Part No.	Description	Color Code	Wt. per 100	Bag Qty	Box Qty	Box Weight	List Price
	FAJ	Adapter for Jets (1/2” FIPT x 10-32 NFT)	Black	1.60 lbs	50	250	5 lbs	$1.30 ea.
	FREL250	1/2” Riser with 1/4” Barbed Elbow (1/2” FIPT x 1/2” MIPT x 1/4” Barbed Elbow)	Black	2.60 lbs	50	200	6 lbs	$2.40 ea.

Riser Assemblies

	Part No.	Description	Color Code	Wt. per 100	Bag Qty	Box Qty	Box Weight	List Price
	FMA50-6	6” Riser (0.160” x 0.300”) in FMA50 1/2” Male Adapter	Black	1.60 lbs	N/A	400	8 lbs	$1.31 ea.
	FMA50-8	8” Riser (0.160” x 0.300”) in FMA50 1/2” Male Adapter	Black	1.95 lbs	N/A	400	9 lbs	$1.35 ea.
	FMA50-12	12” Riser (0.160” x 0.300”) in FMA50 1/2” Male Adapter	Black	2.65 lbs	N/A	400	12 lbs	$1.42 ea.
	FRRS8-6	6” Riser (0.160” x 0.300”) on FRRS8 8” Stake	Black	3.45 lbs	N/A	400	15 lbs	$1.49 ea.
	FRRS8-8	8” Riser (0.160” x 0.300”) on FRRS8 8” Stake	Black	3.80 lbs	N/A	400	17 lbs	$1.55 ea.
	FRRS8-12	12” Riser (0.160” x 0.300”) on FRRS8 8” Stake	Black	4.50 lbs	N/A	400	20 lbs	$1.63 ea.

PVC Bondable Saddles

Part No.	Description	Color Code	Wt. per 100	Bag Qty	Box Qty	Box Weight	List Price
FS5075-2	2” PVC Bondable Saddle (1/2” Socket / 3/4” Spigot Outlet)	White	5.80 lbs	25	300	19 lbs	$1.80 ea.
FS5075-3	3” PVC Bondable Saddle (1/2” Socket / 3/4” Spigot Outlet)	Brown	7.00 lbs	25	300	23 lbs	$1.80 ea.
FS5075-4	4” PVC Bondable Saddle (1/2” Socket / 3/4” Spigot Outlet)	Green	6.60 lbs	25	300	21 lbs	$1.80 ea.
FS5075-6	6” PVC Bondable Saddle (1/2” Socket / 3/4” Spigot Outlet)	Blue	6.40 lbs	25	300	21 lbs	$1.80 ea.

Part No.	Description	Color Code	Wt. per 100	Bag Qty	Box Qty	Box Weight	List Price
FS7510-2	2” PVC Bondable Saddle (3/4” Socket / 1” Spigot Outlet)	White	7.00 lbs	25	300	23 lbs	$1.80 ea.
FS7510-3	3” PVC Bondable Saddle (3/4” Socket / 1” Spigot Outlet)	Brown	8.00 lbs	25	300	26 lbs	$1.80 ea.
FS7510-4	4” PVC Bondable Saddle (3/4” Socket / 1” Spigot Outlet)	Green	7.60 lbs	25	300	24 lbs	$1.80 ea.
FS7510-6	6” PVC Bondable Saddle (3/4” Socket / 1” Spigot Outlet)	Blue	7.40 lbs	25	300	24 lbs	$1.80 ea.

Note: Use a 15/16” or 1” drill bit.
Heavy bodied cement (IPS #719 or equivalent) recommended.
Always prime both pipe and saddle.
Saddle should not be exposed to high temperatures or direct sunlight until after it has been glued to pipe.

IPS Hose Riser Adapters

	Part No.	Description	Color Code	Wt. per 100	Bag Qty	Box Qty	Box Weight	List Price
	FHA7550	IPS Hose Thread Adapter (1/2” Socket / 3/4” Spigot x 3/4” MHT)	Black	2.6 lbs	100	800	23 lbs	$1.30 ea.
	FHA7575HD	Deep Socket Heavy Duty IPS Hose Thread Adapter (3/4” Socket / 1” Spigot x 3/4” MHT)	Black	5.0 lbs	100	700	37 lbs	$1.56 ea.
	FHAL75	Deep Socket Heavy Duty Hose Thread 90° Adapter (3/4” Socket / 1” Spigot x 3/4” MHT)	Black	7.0 lbs	50	300	23 lbs	$3.33 ea.
	FHAX75	5-Way Threaded Cross (3/4” Socket / 1” Spigot x 3/4” MHT)	Black	12.0 lbs	10	100	14 lbs	$7.92 ea.
	FHAXS75	5-Way Threaded Cross with Swivel (3/4” FHT Swivel x 3/4” MHT)	Black	13.0 lbs	10	100	15 lbs	$9.30 ea.
	FSTT75W	3/4” FHT Swivel w/ Washer x 3/4” Male Hose Thread Tee	Black	6.10 lbs	50	500	32 lbs	$2.34 ea.

Spiral Cut Curls

	Part No.	Description	Color Code	Wt. per 100	Bag Qty	Box Qty	Box Weight	List Price
	FCURL73	3” x 18 mm Spiral Cut Curl (fits 0.660” to 0.710” OD tubing)	Black	0.90 lbs	N/A	3,000	31 lbs	$0.11 ea.
	FCURL73G	3” x 18 mm Spiral Cut Curl, Gaylord Quantity (fits 0.660” to 0.710” OD tubing)	Black	0.90 lbs	N/A	50,000	N/A	$0.10 ea.
	FCURL74	4” x 18 mm Spiral Cut Curl (fits 0.660” to 0.710” OD tubing)	Black	1.20 lbs	N/A	2,200	30 lbs	$0.13 ea.
	FCURL74G	4” x 18 mm Spiral Cut Curl, Gaylord Quantity (fits 0.660” to 0.710” OD tubing)	Black	1.20 lbs	N/A	35,000	N/A	$0.12 ea.
	FCURL84	4” x 20 mm Spiral Cut Curl (fits 0.800” to 0.840” OD tubing)	Black	1.40 lbs	N/A	2,000	31 lbs	$0.15 ea.
	FCURL84G	4” x 20 mm Spiral Cut Curl Gaylord Quantity (fits 0.800” to 0.840” OD tubing)	Black	1.40 lbs	N/A	32,000	N/A	$0.14 ea.
	FCURL94	4” x 3/4” Spiral Cut Curl (fits 0.920” to 0.940” OD tubing)	Black	1.50 lbs	N/A	1,700	28 lbs	$0.19 ea.
	FCURL94G	4” x 3/4” Spiral Cut Curl Gaylord Quantity (fits 0.920” to 0.940” OD tubing)	Black	1.50 lbs	N/A	30,000	N/A	$0.17 ea.

Note: Bag quantities available. Other lengths and sizes available upon request. Please call for details. Certain minimums may apply.

Tubing Support Hooks

Part No.	Description	Color Code	Wt. per 100	Bag Qty	Box Qty	Box Weight	List Price
FSH18	18 mm Tubing Support Hook (0.660” to 0.710” OD tubing)	Black	0.65 lbs	500	4,000	28 lbs	$0.20 ea.
FSH20	20 mm Tubing Support Hook (0.800” to 0.840” OD tubing)	Black	0.70 lbs	500	3,000	22 lbs	$0.22 ea.
FSH75	3/4” Tubing Support Hook (0.920” to 0.940” OD tubing)	Black	0.75 lbs	500	2,500	21 lbs	$0.38 ea.

QuickTie™ Vineyard & Orchard Ties

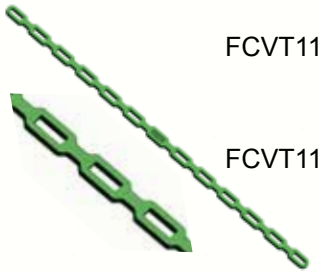

Part No.	Description	Color Code	Wt. per 100	Bag Qty	Box Qty	Box Weight	List Price
FCVT11	11.5” Adjustable Length Vine & Orchard QuickTie™	Black	0.80 lbs	250	4,000	35 lbs	$0.22 ea.
FCVT11SF	11.5” Super Flex Adjustable Length Vine & Orchard QuickTie™	Green	0.80 lbs	250	4,000	33 lbs	$0.25 ea.

QuickClip™ for Trellis Wire

Part No.	Description	Color Code	Wt. per 100	Bag Qty	Box Qty	Box Weight	List Price
FQC3	2.5” QuickClip™ for Trellis Wire (fits 12 - 14 gauge wire)	Black	0.23 lbs	500	5,000	12 lbs	$0.11 ea.
FQC4	3.5” QuickClip™ for Trellis Wire (12 gauge)	Black	0.25 lbs	500	5,000	13 lbs	$0.12 ea.

Bird Netting C-Clip

Part No.	Description	Color Code	Wt. per 100	Bag Qty	Box Qty	Box Weight	List Price
FBNC	Bird Netting C-Clip	Red	0.20 lbs	500	10,000	21 lbs	$0.11 ea.

Poly Cut-Off Riser Nipples

	Part No.	Description	Color Code	Wt. per 100	Bag Qty	Box Qty	Box Weight	List Price
	FCON50	1/2” MIPT x 6” (7-in-1) Poly Cut-Off Riser Nipple (7 potential lengths: 1.5”, 2.0”, 2.5”, 3.5”, 4.0”, 4.75”, 6.0”)	Black	4.20 lbs	50	500	22 lbs	$0.62 ea.
	FCON75	3/4” MIPT x 6” (7-in-1) Poly Cut-Off Riser Nipple (7 potential lengths: 1.5”, 2.0”, 2.5”, 3.5”, 4.0”, 4.75”, 6.0”)	Black	6.20 lbs	25	250	17 lbs	$1.64 ea.
	FCON7550	3/4” MIPT x 1/2” MIPT x 6” (5-in-1) Poly Cut-Off Riser Nipple (5 potential lengths: 1.5”, 2.5”, 4.0”, 4.75”, 6.0”)	Black	4.70 lbs	50	250	13 lbs	$1.64 ea.
	FCON50FM	1/2” FIPT x 1/2” MIPT x 6” (8-in-1) Poly Cut-Off Riser Nipple (8 potential lengths: 1.5”, 2.0”, 2.75”, 3.5”, 4.0”, 4.75”, 5.25”, 6.0”)	Black	4.10 lbs	50	250	11 lbs	$1.64 ea.

PVC Pipe Repair Couplers

	Part No.	Description	Color Code	Wt. per 100	Bag Qty	Box Qty	Box Weight	List Price
	FRC75	3/4” PVC Pipe Repair Coupler (Use with primer and solvent, max pressure of 100 psi)	White	17.5 lbs	N/A	100	19 lbs	$5.30 ea.
	FRC100	1” PVC Pipe Repair Coupler (Use with primer and solvent, max pressure of 100 psi)	White	28.0 lbs	N/A	100	30 lbs	$6.36 ea.

Tools

	Part No.	Description	Color Code	Wt. per 100	Bag Qty	Box Qty	Box Weight	List Price
	ZMP	EZ Mini Punch	Yellow	0.70 lbs	50	250	3 lbs	$1.05 ea.
	ZP	EZ Punch	Yellow	6.60 lbs	10	100	8 lbs	$4.64 ea.
	ZPP	EZ Punch Pro (with spring-loaded tip and retainer clip for high speed punching and insertion)	Yellow	7.30 lbs	10	50	5 lbs	$9.32 ea.
	ZTC	EZ Tubing Cutter with Metal Handles and Reversible Stainless Steel Blade (for Poly Tubing up to 1.25” OD)	Red	42.00 lbs	1	15	7 lbs	$25.41 ea.
	ZRB	Stainless Steel Replacement Blade for EZ Tubing Cutter	Silver	3.00 lbs	5	25	2 lbs	$12.26 ea.

Figure “8” End Plugs

	Part No.	Description	Color Code	Wt. per 100	Bag Qty	Box Qty	Box Weight	List Price
	FF870	Figure “8” End Plug (fits 0.620” OD to 0.710 OD tubing)	Black	0.50 lbs	100	2,000	11 lbs	$0.32 ea.
	FF880	Figure “8” End Plug (fits 0.820” OD to 0.840 OD tubing)	Black	0.70 lbs	100	1,500	13 lbs	$0.49 ea.
	FF890	Figure “8” End Plug (fits 0.920” OD to 0.940 OD tubing)	Black	1.20 lbs	100	1,000	13 lbs	$0.65 ea.

Drip Accessories

	Part No.	Description	Color Code	Wt. per 100	Bag Qty	Box Qty	Box Weight	List Price
	FHAT	3/4” FHT x 1/4” Barbed Adapter	Black	2.50 lbs	50	250	7 lbs	$2.15 ea.
	FCAP75	3/4” FHT Cap with washer	Black	1.80 lbs	50	500	10 lbs	$0.88 ea.
	FSW75	3/4” Screen Washer (stainless steel, 30 mesh)	Black	0.50 lbs	100	1,000	6 lbs	$0.93 ea.
	FW75	3/4” Hose Washer	Black	0.20 lbs	100	3,000	7 lbs	$0.18 ea.
	FMC250	1/4” Mounting Clamp (fits 0.220” to 0.250” OD tubing)	Black	0.12 lbs	100	2,500	3 lbs	$0.21 ea
	FMC710	1/2” Mounting Clamp (fits 0.620” to 0.710” OD tubing)	Black	0.60 lbs	100	1,000	7 lbs	$0.50 ea.

Micro Packs

	Part No.	Description	Color Code	Wt. per 100	Bag Qty	Box Qty	Box Weight	List Price
	ERC5/10	0.5 gph, PC Emitter	Red	0.45 lbs	10	2,000	10 lbs	$0.83 ea.
	ERC10/10	1.0 gph, PC Emitter	Black	0.45 lbs	10	2,000	10 lbs	$0.83 ea.
	ERC20/10	2.0 gph, PC Emitter	Green	0.45 lbs	10	2,000	10 lbs	$0.83 ea.
	ETA10/10	1.0 gph, Flag Emitter	Black	0.33 lbs	10	2,000	7 lbs	$0.54 ea.
	ETA20G/10	2.0 gph, Flag Emitter	Light Green	0.33 lbs	10	2,000	7 lbs	$0.54 ea.
	ETA20B/10	2.0 gph, Flag Emitter	Blue	0.33 lbs	10	2,000	7 lbs	$0.54 ea.
	ETA40Y/10	4.0 gph, Flag Emitter	Yellow	0.33 lbs	10	2,000	7 lbs	$0.54 ea.
	ETA40G/10	4.0 gph, Flag Emitter	Dark Green	0.33 lbs	10	2,000	7 lbs	$0.54 ea.
	EAJ360/5	360° Stream Spray Adjustable Jet	Red	0.55 lbs	5	500	4 lbs	$1.88 ea.
	EAJ180/5	180° Fan Spray Adjustable Jet	Blue	0.55 lbs	5	500	4 lbs	$1.88 ea.
	EAJ90/5	90° Fan Spray Adjustable Jet	Black	0.55 lbs	5	500	4 lbs	$1.88 ea.
	EZB360/10	360° 8-Stream Adjustable Emitter with Barbed Inlet	Black	0.36 lbs	10	1,000	5 lbs	$0.86 ea.
	EZS360/5	360° 8-Stream Adjustable Emitter on 6” Stake	Black	1.16 lbs	5	1,000	14 lbs	$1.40 ea.
	EZBFAN/10	Fan Spray Adjustable Emitter with Barbed Inlet	Black	0.46 lbs	10	1,000	6 lbs	$1.01 ea.
	EZSFAN/5	Fan Spray Adjustable Emitter on 6” Stake	Black	1.26 lbs	5	1,000	14 lbs	$1.60 ea.

Micro Packs

	Part No.	Description	Color Code	Wt. per 100	Bag Qty	Box Qty	Box Weight	List Price
	EPCB6/1	6 gph/Outlet, 4 Barbed Outlets, 1/2" FIPT Bubbler	Black	4.40 lbs	1	100	5 lbs	$7.35 ea.
	EPCB10/1	10 gph/Outlet, 4 Barbed Outlets, 1/2" FIPT Bubbler	Red	4.40 lbs	1	100	5 lbs	$7.35 ea.
	EMB30/5	3.0 GPH, Plastic Misting/ Fogging Nozzle with 1/4" Barbed Inlet	Black	0.40 lbs	5	500	4 lbs	$1.74 ea.
	FC250/10	1/4" Barbed Coupling	Black	0.14 lbs	10	5,000	8 lbs	$0.28 ea.
	FC250/25	1/4" Barbed Coupling	Black	0.14 lbs	25	5,000	8 lbs	$0.22 ea.
	FT250/10	1/4" Barbed Tee	Black	0.19 lbs	10	3,000	7 lbs	$0.38 ea.
	FT250/25	1/4" Barbed Tee	Black	0.19 lbs	25	3,000	7 lbs	$0.31 ea.
	FEL250/10	1/4" Barbed Elbow	Black	0.13 lbs	10	3,000	5 lbs	$0.34 ea.
	FEL250/25	1/4" Barbed Elbow	Black	0.13 lbs	25	3,000	5 lbs	$0.29 ea.
	FGP2/20	Dual Goof Plug (10/rack)	Black	0.11 lbs	20	5,000	7 lbs	$0.17 ea.
	FBP250/10	Bug Plug for T220 and T250 Distribution Tubing	Black	0.11 lbs	10	5,000	7 lbs	$0.50 ea.

Micro Packs

	Part No.	Description	Color Code	Wt. per 100	Bag Qty	Box Qty	Box Weight	List Price
	FVB250/5	1/4" Flow Controlling Valve (barb x barb)	Black	0.50 lbs	5	500	4 lbs	$1.85 ea.
	FCC620/5	Compression Coupling	Green	3.00 lbs	5	1,000	32 lbs	$1.30 ea.
	FCC700/5	Compression Coupling	Black	2.90 lbs	5	1,000	31 lbs	$1.30 ea.
	FCC710/5	Compression Coupling	Blue	2.90 lbs	5	1,000	31 lbs	$1.30 ea.
	FCT620/5	Compression Tee	Green	5.00 lbs	5	480	26 lbs	$1.92 ea.
	FCT700/5	Compression Tee	Black	4.80 lbs	5	480	25 lbs	$1.92 ea.
	FCT710/5	Compression Tee	Blue	4.80 lbs	5	480	25 lbs	$1.92 ea.
	FCEL620/5	Compression Elbow	Green	3.60 lbs	5	800	31 lbs	$1.87 ea.
	FCEL700/5	Compression Elbow	Black	3.50 lbs	5	800	30 lbs	$1.87 ea.
	FCEL710/5	Compression Elbow	Blue	3.50 lbs	5	800	30 lbs	$1.87 ea.
	FCEP620/5	Compression End Plug	Green	4.00 lbs	5	800	34 lbs	$2.00 ea.
	FCEP700/5	Compression End Plug	Black	4.00 lbs	5	800	34 lbs	$2.00 ea.
	FCEP710/5	Compression End Plug	Blue	4.00 lbs	5	800	34 lbs	$2.00 ea.

Note: 620 Series fittings fit 0.620" OD tubing.
700 Series fittings fit 0.700" OD tubing.
710 Series fittings fit 0.710" OD tubing.

Micro Packs

	Part No.	Description	Color Code	Wt. per 100	Bag Qty	Box Qty	Box Weight	List Price
	FSJ5/10	5” Galvanized Wire J-Stake, 14 gauge	Silver	1.05 lbs	10	2,000	21 lbs	$0.50 ea.
	FSJ8/10	8” Galvanized Wire J-Stake, 12 gauge	Silver	2.50 lbs	10	1,000	26 lbs	$0.54 ea.
	FS6/10	6” Plastic Support Stake	Black	1.05 lbs	10	2,000	23 lbs	$0.43 ea.
	FRRS8-6/5	6” Riser (0.160” x 0.300”) on FRRS8 8” Stake	Black	3.45 lbs	5	300	12 lbs	$1.75 ea.
	Note: Riser needs to be screwed on to stake.							
	FREL250/5	1/2” Riser with 1/4” Barbed Elbow (1/2” FIPT x 1/2” MIPT x 1/4” Barbed Elbow)	Black	2.60 lbs	5	180	5 lbs	$2.80 ea.
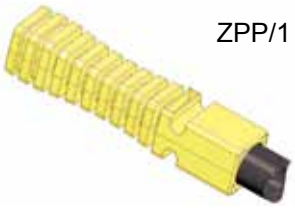	ZPP/1	EZ Punch Pro (with spring-loaded tip and retainer clip for high speed punching and insertion)	Yellow	7.30 lbs	1	50	5 lbs	$10.00 ea.

2.5” Channel Drain and Universal Fitting Kit

Tempo’s 2.5” channel drain system is a proven alternative to traditional concrete channel drain. The system comprises a PVC profile extruded channel plus a snap-in overlapping grate and all the popular fittings required for installation.

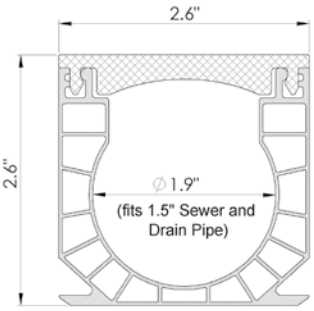

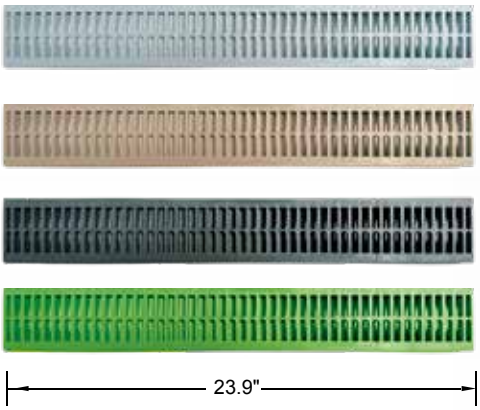

Coupling - CC25

End Plug - CEP25

End Outlet Adapter - CA25
1.5” PVC Pipe

- Robust PVC profile extruded channel.
- Structurally foamed HDPE snap-in overlapping grates. No screws required.
- Grates available in grey, sand, green or black colors.
- Channel available in 4’ or 8’ lengths.
- Tight fitting couplings, end plugs and end outlet adapters.
- Applications for driveways, pool decks, sidewalks, parking lots, courtyards and sport courts.
- Large slots allow flows in excess of 25 gpm per foot.
- Lightweight modular sections for easy installation.
- No glue required.
- ADA compliant.

Patent pending universal fitting kit can be assembled into couplings or elbows or bottom outlet adapters and by itself as a stand alone small catch basin with bottom outlet. See next page for additional details.

Elbow

Tee

Cross

Common Layout Configuration Options using Universal Fitting Kit

2.5” Universal Fitting Kit

Tempo’s Universal Fitting Kit is a first of its kind in the industry. Each kit comes with everything you need to assemble the required fitting for your 2.5” wide channel drain system. The modular design can easily be assembled to make elbows or tees or crosses and a bottom outlet adapter. The fitting connects with the channel lengths to make a streamlined drainage system. Snug fit with no glue necessary. Patent pending.

Coupling

Elbow

Tee

Cross

Coupling
w/ Bottom Outlet
and Leaf Filter

Elbow
w/ Bottom Outlet
and Leaf Filter

Tee
w/ Bottom Outlet
and Leaf Filter

Cross
w/ Bottom Outlet
and Leaf Filter

2.5" Universal Fitting Kit -
CKF25C/CKF25S/CKF25B/CKF25G

Kit includes the following:

2.5" Square Grate
(Grey, Sand,
Black or Green)

Bottom Frame

Outlet Side Panels (x4)

Solid Side Panels (x4)

Bottom Plug

Bottom Outlet Adapter
w/ Leaf Filter

Part No.	Description	Part No.	Description
CD254C	2.5” Channel Drain (4’ length) with Grey Grate	CD258C	2.5” Channel Drain (8’ length) with Grey Grate
CD254S	2.5” Channel Drain (4’ length) with Sand Grate	CD258S	2.5” Channel Drain (8’ length) with Sand Grate
CD254B	2.5” Channel Drain (4’ length) with Black Grate	CD258B	2.5” Channel Drain (8’ length) with Black Grate
CD254G	2.5” Channel Drain (4’ length) with Green Grate	CD258G	2.5” Channel Drain (8’ length) with Green Grate
CG25C	2.5” Slotted Channel Grey Grate (2’ length)	CKF25C	2.5” Channel Universal Fitting Kit with Grey Grate
CG25S	2.5” Slotted Channel Sand Grate (2’ length)	CKF25S	2.5” Channel Universal Fitting Kit with Sand Grate
CG25B	2.5” Slotted Channel Black Grate (2’ length)	CKF25B	2.5” Channel Universal Fitting Kit with Black Grate
CG25G	2.5” Slotted Channel Green Grate (2’ length)	CKF25G	2.5” Channel Universal Fitting Kit with Green Grate
CC25	2.5” Channel Coupling		
CEP25	2.5” Channel End Plug		
CA25	2.5” Channel End Outlet Adapter for 1.5” PVC Pipe		

Load Rating: Rated for pedestrians, cyclists and autos/light trucks up to speeds of 20 mph. Load rating based on channel encased in concrete.

4” Channel Drain and Universal Fitting Kit

Tempo’s 4” channel drain system is a proven alternative to traditional concrete channel drain. The system comprises a PVC profile extruded channel plus a snap-in overlapping grate and all the popular fittings required for installation.

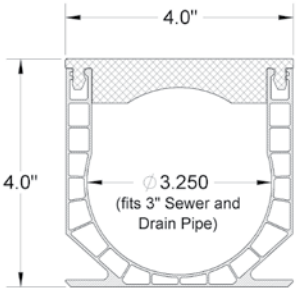

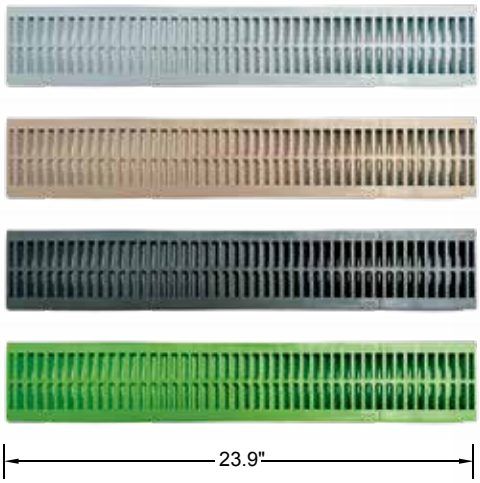

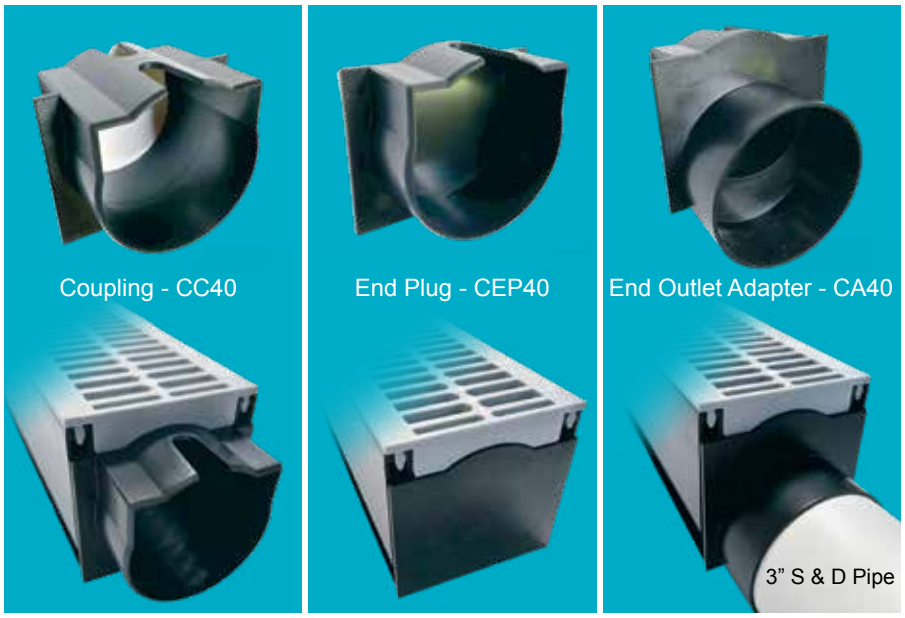

- Robust PVC profile extruded channel.
- Structurally foamed HDPE snap-in overlapping grates. No screws required.
- Grates available in grey, sand, green or black colors.
- Channel available in 4’ or 8’ lengths.
- Tight fitting couplings, end plugs and end outlet adapters.
- Applications for driveways, pool decks, sidewalks, parking lots, courtyards and sport courts.
- Large slots allow flows in excess of 50 gpm per foot.
- Lightweight modular sections for easy installation.
- No glue required.
- ADA compliant.

Patent pending universal fitting kit can be assembled into couplings or elbows or bottom outlet adapters and by itself as a stand alone small catch basin with bottom outlet. See next page for additional details.

Elbow

Tee

Cross

Common Layout Configuration Options using Universal Fitting Kit

4” Universal Fitting Kit

Tempo’s Universal Fitting Kit is a first of its kind in the industry. Each kit comes with everything you need to assemble the required fitting for your 4” wide channel drain system. The modular design can easily be assembled to make elbows or tees or crosses and a bottom outlet adapter. The fitting connects with the channel lengths to make a streamlined drainage system. Snug fit with no glue necessary. Patent pending.

Coupling

Elbow

Tee

Cross

Coupling
w/ Bottom Outlet
and Leaf Filter

Elbow
w/ Bottom Outlet
and Leaf Filter

Tee
w/ Bottom Outlet
and Leaf Filter

Cross
w/ Bottom Outlet
and Leaf Filter

4" Universal Fitting Kit -
CKF40C/CKF40S/CKF40B/CKF40G

Kit includes the following:

4" Square Grate
(Grey, Sand,
Black or Green)

Bottom Frame

Outlet Side Panels (x4)

Solid Side Panels (x4)

Bottom Plug

Bottom Outlet Adapter
w/ Leaf Filter

Part No.	Description	Part No.	Description
CD404C	4” Channel Drain (4’ length) with Grey Grate	CD408C	4” Channel Drain (8’ length) with Grey Grate
CD404S	4” Channel Drain (4’ length) with Sand Grate	CD408S	4” Channel Drain (8’ length) with Sand Grate
CD404B	4” Channel Drain (4’ length) with Black Grate	CD408B	4” Channel Drain (8’ length) with Black Grate
CD404G	4” Channel Drain (4’ length) with Green Grate	CD408G	4” Channel Drain (8’ length) with Green Grate
CG40C	4” Slotted Channel Grey Grate (2’ length)	CKF40C	4” Channel Universal Fitting Kit with Grey Grate
CG40S	4” Slotted Channel Sand Grate (2’ length)	CKF40S	4” Channel Universal Fitting Kit with Sand Grate
CG40B	4” Slotted Channel Black Grate (2’ length)	CKF40B	4” Channel Universal Fitting Kit with Black Grate
CG40G	4” Slotted Channel Green Grate (2’ length)	CKF40G	4” Channel Universal Fitting Kit with Green Grate
CC40	4” Channel Coupling		
CEP40	4” Channel End Plug		
CA40	4” Channel End Outlet Adapter for 3” S & D PVC Pipe		

Load Rating: Rated for pedestrians, cyclists and autos/light trucks up to speeds of 20 mph. Load rating based on channel encased in concrete.

Small Round Grates: 3”, 4” and 6”

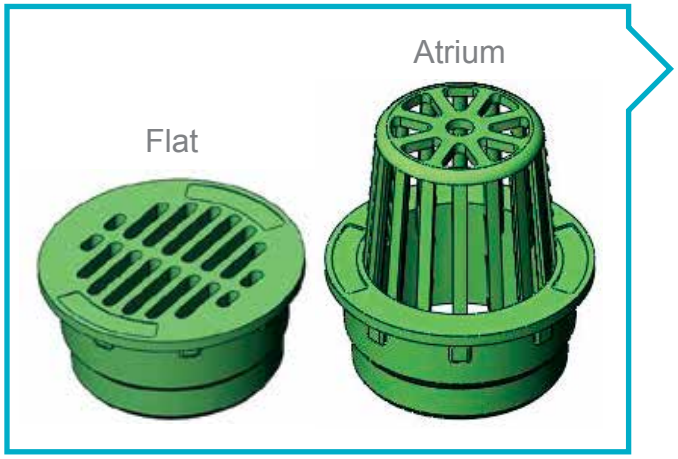

Features:

- Manufactured from structurally foamed High Density Polyethylene (HDPE).
- UV stabilized to protect from sun degradation.
- Available in green, black, sand, grey (grey color only available in flat grates) and purple (3” round flat grate only).
- Flat and atrium (domed) profiles.
- Each grate has three stepped diameters to fit Sewer and Drain Pipe and Fittings, Triple Wall Pipe and Corrugated Pipe.
- Textured anti-skid surface.
- Load rated for pedestrian traffic (flat grates only).
- ADA compliant (flat grates only).
- Made in the USA.

Part No.	Description	Each Diameter Fits: Small	Each Diameter Fits: Medium	Each Diameter Fits: Large	Slot Width	Flow Rating	Max Load[1]
G3RFG G3RFB G3RFS G3RFC G3RFP	3”, Flat, Green 3”, Flat, Black 3”, Flat, Sand 3”, Flat, Grey 3”, Flat, Purple	3” Triple Wall Pipe	3” S and D Pipe (ASTM D2729), 3” Corrugated Pipe[3]	3” S and D Fittings (SDR 35)	3/16”	3 GPM	500 lbs
G4RFG G4RFB G4RFS G4RFC	4”, Flat, Green 4”, Flat, Black 4”, Flat, Sand 4”, Flat, Grey	4” Triple Wall Pipe	4” S and D Pipe (ASTM D2729), 4” Corrugated Pipe[3]	4” S and D Fittings (SDR 35)	1/4”	6 GPM	750 lbs
G6RFG G6RFB G6RFS G6RFC	6”, Flat, Green 6”, Flat, Black 6”, Flat, Sand 6”, Flat, Grey	6” Sewer Pipe (ASTM D3034, SDR 35)[2]	6” S and D Pipe (ASTM D2729), 6” Corrugated Pipe[3]	6” S and D Fittings (SDR 35), 6” Round Catch Basin	5/16”	16 GPM	1,000 lbs
G3RAG G3RAB G3RAS	3”, Atrium, Green 3”, Atrium, Black 3”, Atrium, Sand	3” Triple Wall Pipe	3” S and D Pipe (ASTM D2729), 3” Corrugated Pipe[3]	3” S and D Fittings (SDR 35)	1/4”	12 GPM	N/A
G4RAG G4RAB G4RAS	4”, Atrium, Green 4”, Atrium, Black 4”, Atrium, Sand	4” Triple Wall Pipe	4” S and D Pipe (ASTM D2729), 4” Corrugated Pipe[3]	4” S and D Fittings (SDR 35)	5/16”	20 GPM	N/A
G6RAG G6RAB G6RAS	6”, Atrium, Green 6”, Atrium, Black 6”, Atrium, Sand	6” Sewer Pipe (ASTM D3034, SDR 35)[2]	6” S and D Pipe (ASTM D2729), 6” Corrugated Pipe[3]	6” S and D Fittings (SDR 35), 6” Round Catch Basin	3/8”	36 GPM	N/A

1. Maximum load based on weight uniformly applied across entire grate surface.
2. Grates will fit 6” Sewer Pipe (ASTM D3034, SDR 35) provided the pipe wall thickness is close to the specified minimum of 0.180”.
3. Due to wide manufacturing tolerances of Corrugated Pipe, this fit may not be perfect. If loose, push to larger diameter.

Large Round Grates: 8”, 10”, 12” and 15”

Features:

- Manufactured from structurally foamed High Density Polyethylene (HDPE).
- UV Stabilized to protect from sun degradation.
- Available in green and black.
- Each diameter and tab fits many different pipes including SDR 35 PVC Pipe, Single and Double Wall Corrugated Pipe, Schedule 40 PVC Pipe and C76 Concrete Pipe.
- Textured anti-skid surface.
- 8” and 10” Grates are ADA compliant.
- 12” and 15” Grates include bolt holes to allow for securing to pipe (use #10 1.5” long Phillips flat head stainless steel screws.
- Made in USA.

		Fits				
Part No.	Description	Small Diameter	Tabs[2]	Slot Width	Flow Rating	Max Load[1]
G8RFG G8RFB	8”, Flat, Green 8”, Flat, Black	8” SDR 35 Pipe	8” Single and Double Wall Corrugated Pipe and Schedule 40 Pipe	3/8”	65 GPM	1,500 lbs
G10RFG G10RFB	10”, Flat, Green 10”, Flat, Black	10” SDR 35 Pipe	10” Single and Double Wall Corrugated Pipe and Schedule 40 Pipe	7/16”	100 GPM	2,500 lbs
G12RFG G12RFB	12”, Flat, Green 12”, Flat, Black	12” SDR 35 Pipe	12” Single and Double Wall Corrugated Pipe, Schedule 40 Pipe and C76 Concrete Pipe	1/2”	160 GPM	4,000 lbs
G15RFG G15RFB	15”, Flat, Green 15”, Flat, Black	15” SDR 35 Pipe	15” Single and Double Wall Corrugated Pipe and C76 Concrete Pipe	5/8”	250 GPM	6,000 lbs

1. Maximum load based on weight uniformly applied across entire grate surface.
2. Due to wide manufactruring tolerances of Corrugated Pipe, this fit may not be perfect.

Square Grates: 9”, 12” and 18”

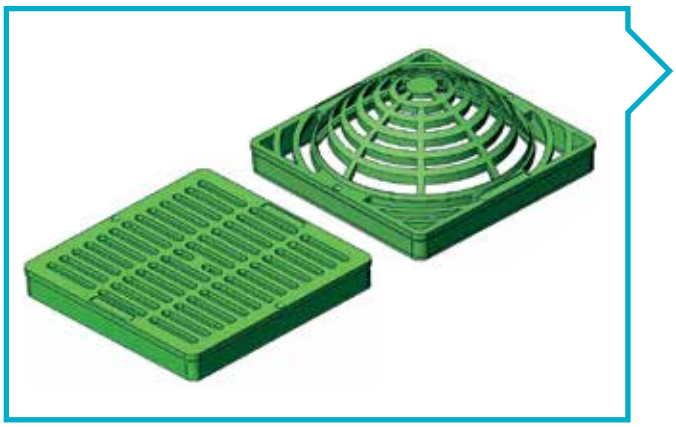

Features:

- Manufactured from structurally foamed High Density Polyethylene (HDPE).
- UV stabilized to protect from sun degradation.
- Available in green, black, sand and grey (sand and grey color only available in flat grates).
- Flat and atrium (domed) profiles.
- Fits 9”, 12” and 18” catch basins.
- Textured anti-skid surface.
- Load rated for autos and light trucks at speeds less than 20 mph (flat grates only).
- Includes two bolt holes to secure to basin (use #6 1.5” long Phillips flat head stainless screws).
- ADA compliant (flat grates only).
- Made in the USA.

Part No.	Description	Fits	Slot Width	Flow Rating	Max Load[1]
G9SFG	9”, Flat, Green	9” Square Catch Basin	3/8”	50 GPM	2,000 lbs
G9SFB	9”, Flat, Black				
G9SFS	9”, Flat, Sand				
G9SFC	9”, Flat, Grey				
G12SFG	12”, Flat, Green	12” Square Catch Basin	7/16”	70 GPM	3,000 lbs
G12SFB	12”, Flat, Black				
G12SFS	12”, Flat, Sand				
G12SFC	12”, Flat, Grey				
G18SFG	18”, Flat, Green	18” Square Catch Basin	15/32”	120 GPM	4,000 lbs
G18SFB	18”, Flat, Black				
G18SFS	18”, Flat, Sand				
G18SFC	18”, Flat, Grey				
G9SAG	9”, Atrium, Green	9” Square Catch Basin	3/8”	40 GPM	N/A
G9SAB	9”, Atrium, Black				
G12SAG	12”, Atrium, Green	12” Square Catch Basin	7/16”	65 GPM	N/A
G12SAB	12”, Atrium, Black				

1. Maximum load rating based on basin encased in concrete and weight uniformly applied across entire grate surface.

Round Lids: 12” and 15”

Features:

- Manufactured from structurally foamed HDPE.
- UV Stabilized to protect from sun degradation.
- Each diameter & tab fits various pipes including SDR 35 PVC Pipe, Single and Double Wall Corrugated Pipe, Schedule 40 PVC Pipe and C76 Concrete Pipe.
- Textured anti-skid surface.
- Lids include bolt holes to allow for securing to pipe (use #10 1.5” long Phillips flat head stainless steel screws.
- Made in USA.

		Fits				
Part No.	Description	Small Diameter	Tabs[2]	Slot Width	Flow Rating	Max Load[1]
G12RCG	12”, Flat, Solid, Green	12” SDR 35 Pipe	12” Single and Double Wall Corrugated Pipe, Schedule 40 Pipe and C76 Concrete Pipe	N/A	N/A	4,000 lbs
G15RCG	15”, Flat, Solid, Green	15” SDR 35 Pipe	15” Single and Double Wall Corrugated Pipe and C76 Concrete Pipe	N/A	N/A	6,000 lbs

1. Maximum load based on weight uniformly applied across entire grate surface.
2. Due to wide manufactruring tolerances of Corrugated Pipe, this fit may not be perfect.

Square Universal Grates: 6”

Features:

- Manufactured from structurally foamed High Density Polyethylene (HDPE).
- UV stabilized to protect from sun degradation.
- Available in green, black, sand and grey.
- Textured anti-skid surface.
- Load rated for pedestrian traffic.
- ADA compliant.
- Made in the USA.

Part No.	Description	Fits	Slot Width	Flow Rating	Max Load[1]
G6SUG G6SUB G6SUS G6SUC	6”, Flat, Green 6”, Flat, Black 6”, Flat, Sand 6”, Flat, Grey	3" & 4" S and D Pipe (ASTM D2729), 3" & 4" Corrugated Pipe, 3" & 4" Triple Wall Pipe, 3", 4" & 6" S and D Fittings (SDR 35), 6" Round Catch Basin	1/4”	11 GPM	250 lbs

1. Maximum load rating based on basin encased in concrete and weight uniformly applied across entire grate surface.

Pop-Up Relief Valves

Features:

- Available in 4 configurations.
- Pop-Up body manufactured from structurally foamed High Density Polyethylene (HDPE).
- Elbow (where applicable) manufactured from PVC.
- Adapter (where applicable) manufactured from High Impact Polystyrene (HIPS).
- UV stabilized to protect from sun degradation.
- Cover rises 1/2” to discharge excess water in system.
- Spring automatically retracts cover to flush position after excess water is discharged.
- Can be used in both vertical and horizontal position.
- Stainless steel spring to prevent rusting.
- PVC elbows (where applicable) include a 1/4” drain hole to eliminate standing water.
- Made in the USA.

Part No.	Description	Connects To
APU	Pop-Up Relief Valve (Emitter), Green	3” or 4” S and D Fittings (SDR 35)
APU3	Pop-Up Relief Valve (Emitter) with 3” Elbow, Green	3” S and D Pipe (ASTM D2729) and 3” Triple Wall Pipe
APU4	Pop-Up Relief Valve (Emitter) with 4” Elbow, Green	4” S and D Pipe (ASTM D2729 & D3034) and 4” Triple Wall Pipe
APUP34	Pop-Up Relief Valve (Emitter) with 4” Elbow and Adapter, Green	3” or 4” Corrugated Pipe, 3” or 4” Triple Wall Pipe and 3” or 4” S and D Pipe (ASTM D2729)

Round Catch Basins: 6”

Features:

- Manufactured from High Impact Polystyrene (HIPS).
- UV stabilized to protect from sun degradation.
- Available in both 1 and 2 outlet models.
- Universal outlet used to connect to 3" & 4" Sewer & Drain Pipe (ASTM D2729), 3" & 4" Corrugated Pipe and 3" & 4" Triple Wall Pipe.
- Accepts 6” Round Flat Grates, 6” Round Atrium Grates and 6” Square Universal Grates.
- To extend height of basin, use 6” PVC Pipe (ASTM D2729 and ASTM D3034, SDR 35) as a riser.
- Includes a sump to allow sediment to settle in basin to minimize clogging of pipes.
- Made in the USA.

Part No.	Description	Inlet (Top) Accepts	Outlet (Side) Fits	Number of Outlets	Capacity	Sump Capacity
BR61	6” Round Catch Basin, 1 Outlet, Black	6” Round Flat and Atrium Grates, 6” Square Universal Grates, 6” PVC Pipe (ASTM D2729 and ASTM D3034, SDR 35)	3” or 4” Corrugated, Triple Wall and S and D Pipe (ASTM D2729)	1	0.80 gals.	0.20 gals
BR62	6” Round Catch Basin, 2 Outlets, Black	6” Round Flat and Atrium Grates, 6” Square Universal Grates, 6” PVC Pipe (ASTM D2729 and ASTM D3034, SDR 35)	3” or 4” Corrugated, Triple Wall and S and D Pipe (ASTM D2729)	2	0.80 gals.	0.20 gals

Square Catch Basins: 9”, 12” and 18”

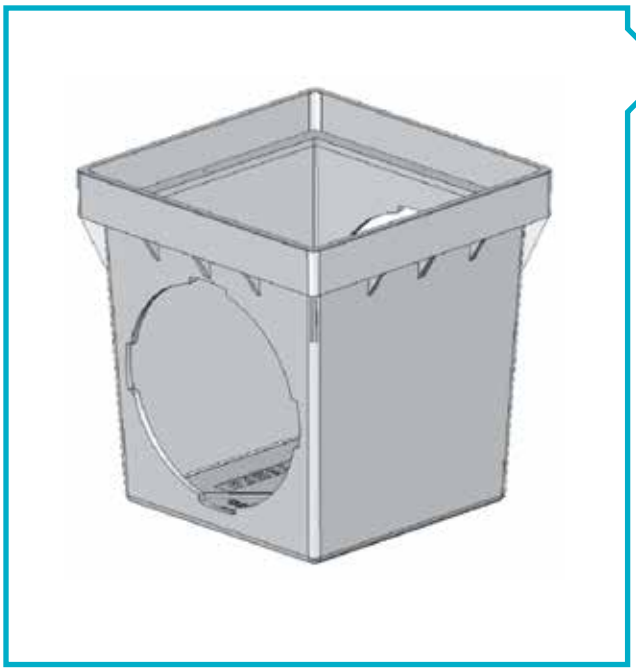

Features:

- Manufactured from High Density Polyethylene (HDPE).
- UV stabilized to protect from sun degradation.
- Two or four side panel openings plus an optional perforated opening at the bottom of the basin.
- Includes four 5/8” potential drain holes at bottom.
- Use a 3” and 4” Basin Adapter (ABA34 or ABAO34) to connect to 3" & 4" Sewer & Drain Pipe (ASTM D2729), 3" & 4" Corrugated Pipe and 3" & 4" Triple Wall Pipe.
- Use a 6” Basin Adapter (ABA6) to connect to 6" PVC Pipe (ASTM D2729 and ASTM D3034, SDR 35) and 6” Corrugated Pipe.
- Use a Basin Plug to plug unused outlets.
- Use 9” or 12” Square Basin Riser(s) to extend height of 9” and 12” Square Catch Basins, respectively.
- Accepts 9”, 12” and 18” Square Flat and Square Atrium Grates.
- Includes 4 screw holes to enable grates to be secured to basin.
- Made in the USA.

Part No.	Description	Inlet (Top) Accepts	Outlet (Side) Fits	Number of Outlets	Capacity	Sump Capacity
BS92	9” Square Catch Basin, 2 Outlets, Black	9” Square Flat and Atrium Grates and 9” Square Basin Riser	Basin Plug (ABP), 3” & 4” Basin Adapter (ABA34 or ABAO34), and 6” Basin Adapter (ABA6)	2	2.20 gals	0.45 gals
BS94	9” Square Catch Basin, 4 Outlets, Black	9” Square Flat and Atrium Grates and 9” Square Basin Riser	Basin Plug (ABP), 3” & 4” Basin Adapter (ABA34 or ABAO34), and 6” Basin Adapter (ABA6)	4	2.20 gals	0.45 gals
BS122	12” Square Catch Basin, 2 Outlets, Black	12” Square Flat and Atrium Grates and 12” Square Basin Riser	Basin Plug (ABP), 3” & 4” Basin Adapter (ABA34 or ABAO34), and 6” Basin Adapter (ABA6)	2	5.10 gals	1.25 gals
BS124	12” Square Catch Basin, 4 Outlets, Black	12” Square Flat and Atrium Grates and 12” Square Basin Riser	Basin Plug (ABP), 3” & 4” Basin Adapter (ABA34 or ABAO34), and 6” Basin Adapter (ABA6)	4	5.10 gals	1.25 gals
BS182	18” Square Catch Basin, 2 Outlets, Black	18” Square Flat Grates	Basin Plug (ABP), 3” & 4” Basin Adapter (ABA34 or ABAO34), and 6” Basin Adapter (ABA6)	2	16.70 gals	4.90 gals
BS184	18” Square Catch Basin, 4 Outlets, Black	18” Square Flat Grates	Basin Plug (ABP), 3” & 4” Basin Adapter (ABA34 or ABAO34), and 6” Basin Adapter (ABA6)	4	16.70 gals	4.90 gals

Square Low Profile Basins: 9” and 12”

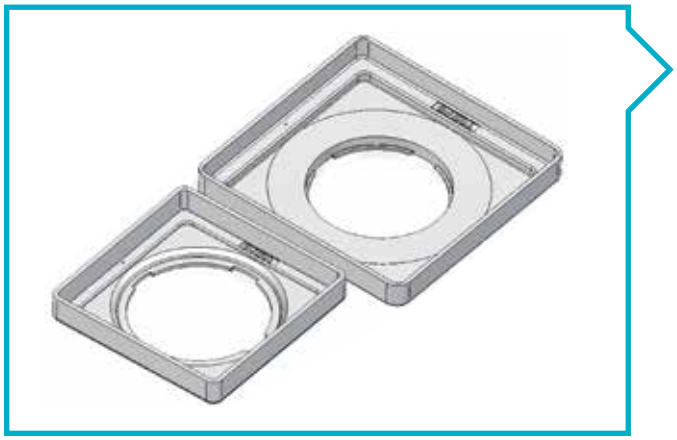

Features:

- Manufactured from High Impact Polystyrene (HIPS).
- UV stabilized to protect from sun degradation.
- One bottom opening designed to accept Basin Adapters (ABA34 and ABA6).
- Use a 3” and 4” Basin Adapter (ABA34) to connect to 3" & 4" Sewer & Drain Pipe (ASTM D2729), 3" & 4" Corrugated Pipe and 3" & 4" Triple Wall Pipe.
- Use a 6” Basin Adapter (ABA6) to connect to 6" PVC Pipe (ASTM D2729 and ASTM D3034, SDR 35) and 6” Corrugated Pipe.
- Accepts 9” and 12” Square Flat and Square Atrium Grates.
- Includes 2 screw holes to enable grates to be secured to basin.
- Made in the USA.

Part No.	Description	Inlet (Top) Accepts	Outlet (Bottom) Fits	Number of Outlets
BS9LP	9” Low Profile Basin, Black	9” Square Flat and Atrium Grates	Basin Plug (ABP), 3” & 4” Basin Adapter (ABA34), and 6” Basin Adapter (ABA6)	1
BS12LP	12” Low Profile Basin, Black	12” Square Flat and Atrium Grates	Basin Plug (ABP), 3” & 4” Basin Adapter (ABA34), and 6” Basin Adapter (ABA6)	1

6” Round Valve Boxes

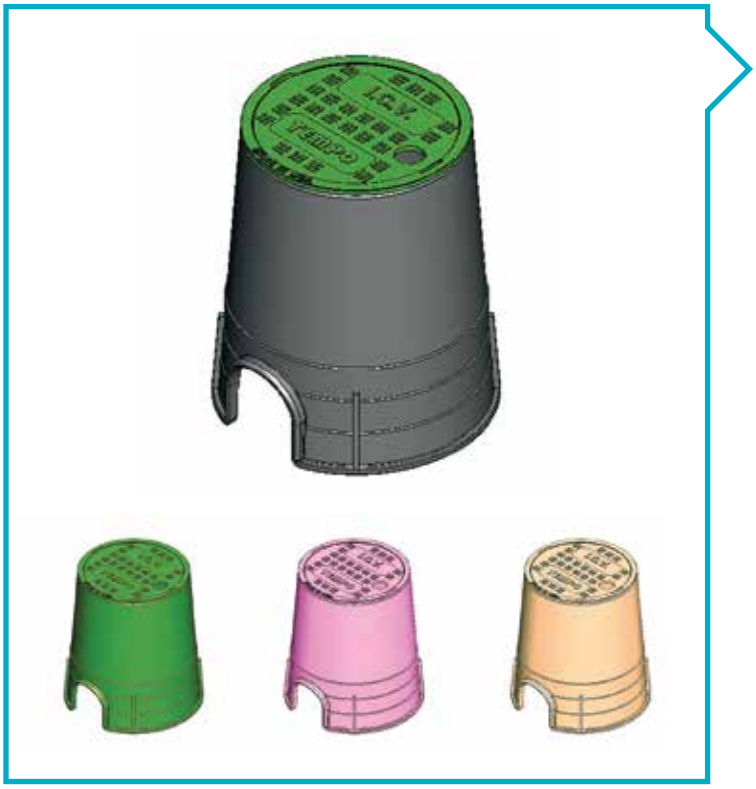

A robust 6” round valve box with snap-in lid. Used as a durable enclosure to protect and provide easy access to valves or subsurface components of an irrigation system. Has overlapping lid to prevent dirt and grass from lodging between lid and body.

Features:

- Available in green, black, sand and purple.
- Secure snap-in lid.
- Lift hole in lid for easy removal.
- Skid resistant lid.
- Bottom flange to prevent sinking.
- “ICV” or “Reclaimed Water” marking.
- Overlapping lid prevents dirt and grass entering box.
- Pre-molded pipe slots (fits up to 2” diameter pipe).
- Manufactured from structurally foamed HDPE.
- Contains UV inhibitors to prevent discoloration.
- Made in USA.

		Color		Dimensions				
Part No.	Description	Lid	Base	Top	Inside Bottom	Height	Weight	Lockable
VBR6GG	6” Round Valve Box (ICV)	Green	Green	6.25” Φ	7.25” Φ	9.00”	1.10 lbs	No
VBR6GB	6” Round Valve Box (ICV)	Green	Black	6.25” Φ	7.25” Φ	9.00”	1.10 lbs	No
VBR6PP	6” Round Valve Box (Reclaimed Water)	Purple	Purple	6.25” Φ	7.25” Φ	9.00”	1.10 lbs	No
VBR6SS	6” Round Valve Box (ICV)	Sand	Sand	6.25” Φ	7.25” Φ	9.00”	1.10 lbs	No
VLR6G	6” Round Replacement Lid (ICV)	Green	N/A	N/A	N/A	N/A	0.20 lbs	No
VLR6P	6” Round Replacement Lid (Reclaimed Water)	Purple	N/A	N/A	N/A	N/A	0.20 lbs	No
VLR6S	6” Round Replacement Lid (ICV)	Sand	N/A	N/A	N/A	N/A	0.20 lbs	No

10” Round Valve Boxes

A robust 10” round valve box with twist lock bayonet style lid. Used as a durable enclosure to protect and provide easy access to valves or subsurface components of an irrigation system. Has overlapping lid to prevent dirt and grass from lodging between lid and body.

Features:

- Available in green, black, sand and purple.
- Secure twist lock bayonet style lid.
- Two blind holes in lid to easily rotate lid for removal.
- Skid resistant lid.
- Lockable lid option to prevent vandalism.
- Stepped body for additional side wall support.
- Bottom flange to prevent sinking.
- “ICV” or “Reclaimed Water” marking.
- Overlapping lid prevents dirt and grass entering box.
- Pre-molded pipe slots (fits up to 2.5” diameter pipe).
- Manufactured from structurally foamed HDPE.
- Contains UV inhibitors to prevent discoloration.
- Made in USA.

		Color		Dimensions				
Part No.	Description	Lid	Base	Top	Inside Bottom	Height	Weight	Lockable Option
VBR10GG	10” Round Valve Box (ICV)	Green	Green	9.50” Φ	11.25” Φ	10.50”	2.40 lbs	Yes
VBR10GB	10” Round Valve Box (ICV)	Green	Black	9.50” Φ	11.25” Φ	10.50”	2.40 lbs	Yes
VBR10PP	10” Round Valve Box (Reclaimed Water)	Purple	Purple	9.50” Φ	11.25” Φ	10.50”	2.40 lbs	Yes
VBR10SS	10” Round Valve Box (ICV)	Sand	Sand	9.50” Φ	11.25” Φ	10.50”	2.40 lbs	Yes
VLR10G	10” Round Replacement Lid (ICV)	Green	N/A	N/A	N/A	N/A	0.70 lbs	Yes
VLR10P	10” Round Replacement Lid (Reclaimed Water)	Purple	N/A	N/A	N/A	N/A	0.70 lbs	Yes
VLR10S	10” Round Replacement Lid (ICV)	Sand	N/A	N/A	N/A	N/A	0.70 lbs	Yes
VBA	3/8” x 2” SS Bolt Assembly to bolt down 10” and 14” x 19” Valve Boxes	N/A	N/A	N/A	N/A	N/A	N/A	N/A

14” x 19” Standard Valve Boxes

A robust 14” X 19” standard rectangular valve box with snap-in lid. Used as a durable enclosure to protect and provide easy access to valves or subsurface components of an irrigation system. Has overlapping lid to prevent dirt and grass from lodging between lid and body.

Features:

- Available in green, black, sand and purple.
- Secure snap-in lid.
- Easy removal of lid.
- Skid resistant lid.
- Lockable lid option to prevent vandalism.
- Extra ribs for additional side wall support.
- Bottom flange to prevent sinking.
- “ICV” or “Reclaimed Water” marking.
- Overlapping lid prevents dirt and grass entering box.
- Pre-molded pipe slots (fits up to 2.5” diameter pipe).
- Manufactured from structurally foamed HDPE.
- Contains UV inhibitors to prevent discoloration.
- Made in USA.

		Color		Dimensions				
Part No.	Description	Lid	Base	Top	Inside Bottom	Height	Weight	Lockable Option
VB1419GG	14” x 19” Rectangular Valve Box (ICV)	Green	Green	11.75” x 16.75”	14.00” x 19.00”	12.50”	6.40 lbs	Yes
VB1419GB	14” x 19” Rectangular Valve Box (ICV)	Green	Black	11.75” x 16.75”	14.00” x 19.00”	12.50”	6.40 lbs	Yes
VB1419PP	14” x 19” Rectangular Valve Box (Reclaimed Water)	Purple	Purple	11.75” x 16.75”	14.00” x 19.00”	12.50”	6.40 lbs	Yes
VB1419SS	14” x 19” Rectangular Valve Box (ICV)	Sand	Sand	11.75” x 16.75”	14.00” x 19.00”	12.50”	6.40 lbs	Yes
VLR1419G	14” x 19” Rectangular Replacement Lid (ICV)	Green	N/A	N/A	N/A	N/A	1.80 lbs	Yes
VLR1419P	14” x 19” Rectangular Replacement Lid (Reclaimed Water)	Purple	N/A	N/A	N/A	N/A	1.80 lbs	Yes
VLR1419S	14” x 19” Rectangular Replacement Lid (ICV)	Sand	N/A	N/A	N/A	N/A	1.80 lbs	Yes
VBA	3/8” x 2” SS Bolt Assembly to bolt down 10” and 14” x 19” Valve Boxes	N/A	N/A	N/A	N/A	N/A	N/A	N/A

17” x 24” Jumbo Valve Boxes

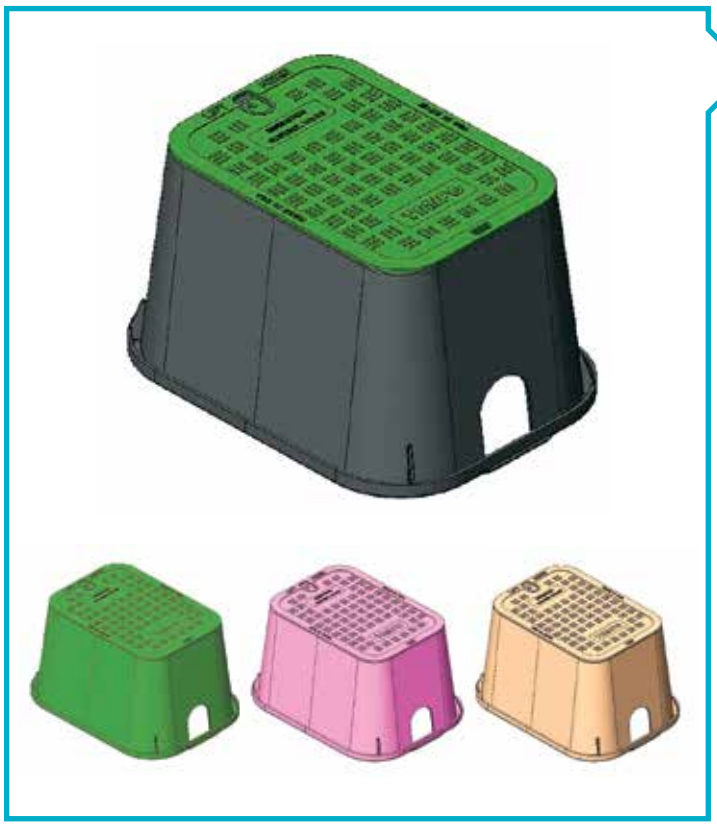

A robust 17” X 24” jumbo rectangular valve box with snap-in lid. Used as a durable enclosure to protect and provide easy access to valves or subsurface components of an irrigation system. Has overlapping lid to prevent dirt and grass from lodging between lid and body.

Features:

- Available in green, black, sand and purple.
- Secure snap-in, skid resistant lid.
- Recessed corners on valve box for easy removal of lid.
- Can be used with jumbo riser to extend height by 5”.
- Lockable lid option to prevent vandalism.
- Extra ribs for additional side wall support.
- Bottom flange to prevent sinking.
- “ICV” or “Reclaimed Water” marking.
- Overlapping lid prevents dirt and grass entering box.
- Pre-molded pipe slots (fits up to 2.5” diameter pipe).
- Manufactured from structurally foamed HDPE.
- Contains UV inhibitors to prevent discoloration.
- Made in USA.

		Color		Dimensions				
Part No.	Description	Lid	Base	Outside Top	Inside Bottom	Height	Weight	Lockable Option
VB1724GG	17” x 24” Rectangular Valve Box (ICV)	Green	Green	15.0” x 21.0”	17.0” x 23.5”	12.75”	10.5 lbs	Yes
VB1724GB	17” x 24” Rectangular Valve Box (ICV)	Green	Black	15.0” x 21.0”	17.0” x 23.5”	12.75”	10.5 lbs	Yes
VB1724PP	17” x 24” Rectangular Valve Box (Reclaimed Water)	Purple	Purple	15.0” x 21.0”	17.0” x 23.5”	12.75”	10.5 lbs	Yes
VB1724SS	17” x 24” Rectangular Valve Box (ICV)	Sand	Sand	15.0” x 21.0”	17.0” x 23.5”	12.75”	10.5 lbs	Yes
VLR1724G	17” x 24” Rectangular Replacement Lid (ICV)	Green	N/A	N/A	N/A	N/A	3.00 lbs	Yes
VLR1724P	17” x 24” Rectangular Replacement Lid (Reclaimed Water)	Purple	N/A	N/A	N/A	N/A	3.00 lbs	Yes
VLR1724S	17” x 24” Rectangular Replacement Lid (ICV)	Sand	N/A	N/A	N/A	N/A	3.00 lbs	Yes
VBA	3/8” x 2” SS Bolt Assembly to bolt down 10”, 14” x 19” and 17” x 24” Valve Boxes	N/A	N/A	N/A	N/A	N/A	N/A	N/A

Standard Low Profile Valve Box

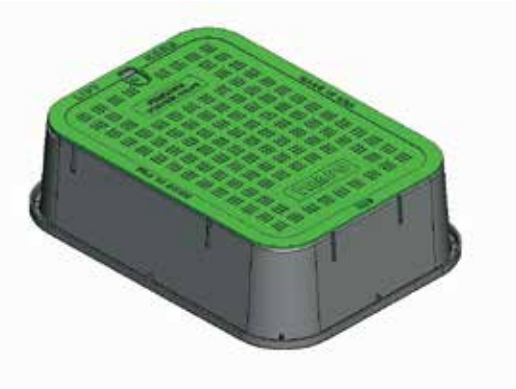

A robust standard low profile valve box with snap-in lid. Ideal for shallow pipe and valve installations with a height of 6.75” (compared to a normal box height of 12.50”). Used as a durable enclosure to protect and provide easy access to valves or subsurface components of an irrigation system. Has overlapping lid to prevent dirt and grass from lodging between lid and body.

Features:

- Available in green, black, sand and purple.
- Secure snap-in, skid resistant lid.
- Recessed corners on valve box for easy removal of lid.
- Can be used with standard valve box as a riser.
- Lockable lid option to prevent vandalism.
- Extra ribs for additional side wall support.
- Bottom flange to prevent sinking.
- “ICV” or “Reclaimed Water” marking.
- Overlapping lid prevents dirt and grass entering box.
- Manufactured from structurally foamed HDPE.
- Contains UV inhibitors to prevent discoloration.
- Made in USA.

		Color		Dimensions				
Part No.	Description	Lid	Base	Outside Top	Inside Bottom	Height	Weight	Lockable Option
VBSLPGG	Standard Low Profile Valve Box (ICV)	Green	Green	11.75” x 16.75”	12.1” x 17.4”	6.75”	4.60 lbs	Yes
VBSLPGB	Standard Low Profile Valve Box (ICV)	Green	Black	11.75” x 16.75”	12.1” x 17.4”	6.75”	4.60 lbs	Yes
VBSLPPP	Standard Low Profile Valve Box (Reclaimed Water)	Purple	Purple	11.75” x 16.75”	12.1” x 17.4”	6.75”	4.60 lbs	Yes
VBSLPSS	Standard Low Profile Valve Box (ICV)	Sand	Sand	11.75” x 16.75”	12.1” x 17.4”	6.75”	5.60 lbs	Yes
VLR1419G	14” x 19” Rectangular Replacement Lid (ICV)	Green	N/A	N/A	N/A	N/A	1.80 lbs	Yes
VLR1419P	14” x 19” Rectangular Replacement Lid (Reclaimed Water)	Purple	N/A	N/A	N/A	N/A	1.80 lbs	Yes
VLR1419S	14” x 19” Rectangular Replacement Lid (ICV)	Sand	N/A	N/A	N/A	N/A	1.80 lbs	Yes
VBA	3/8” x 2” SS Bolt Assembly to bolt down 10”, 14” x 19” and 17” x 24” Valve Boxes	N/A	N/A	N/A	N/A	N/A	N/A	N/A

Standard Valve Box Riser Extender

A robust standard valve box riser extender can be used to increase the height of a standard valve box by 5” when stacked together. Accepts standard valve box snap-in lid. Multiple riser extenders can be stacked on top of each other to increase height by 5” per extender. Can also be used as a standard low profile box when combined with standard lid.

Features:

- Available in green, black, sand and purple.
- Accepts secure snap-in, skid resistant lid.
- Recessed corners on valve box for easy removal of lid.
- Lockable lid option to prevent vandalism.
- Extra ribs for additional side wall support.
- Bottom flange to prevent sinking.
- Manufactured from structurally foamed HDPE.
- Contains UV inhibitors to prevent discoloration.
- Made in USA.

			Dimensions				
Part No.	Description	Color	Outside Top	Inside Bottom	Height	Weight	Lockable Option
VBSRG	Standard Valve Box Riser Extender	Green	11.75” x 16.75”	12.1” x 17.4”	6.50”	2.80 lbs	Yes
VBSRB	Standard Valve Box Riser Extender	Black	11.75” x 16.75”	12.1” x 17.4”	6.50”	2.80 lbs	Yes
VBSRP	Standard Valve Box Riser Extender	Purple	11.75” x 16.75”	12.1” x 17.4”	6.50”	2.80 lbs	Yes
VBSRS	Standard Valve Box Riser Extender	Sand	11.75” x 16.75”	12.1” x 17.4”	6.50”	2.80 lbs	Yes
VLR1419G	14” x 19” Rectangular Replacement Lid (ICV)	Green	N/A	N/A	N/A	1.80 lbs	Yes
VLR1419P	14” x 19” Rectangular Replacement Lid (Reclaimed Water)	Purple	N/A	N/A	N/A	1.80 lbs	Yes
VLR1419S	14” x 19” Rectangular Replacement Lid (ICV)	Sand	N/A	N/A	N/A	1.80 lbs	Yes
VBA	3/8” x 2” SS Bolt Assembly to bolt down 10”, 14” x 19” and 17” x 24” Valve Boxes	N/A	N/A	N/A	N/A	N/A	N/A

Jumbo Low Profile Valve Box

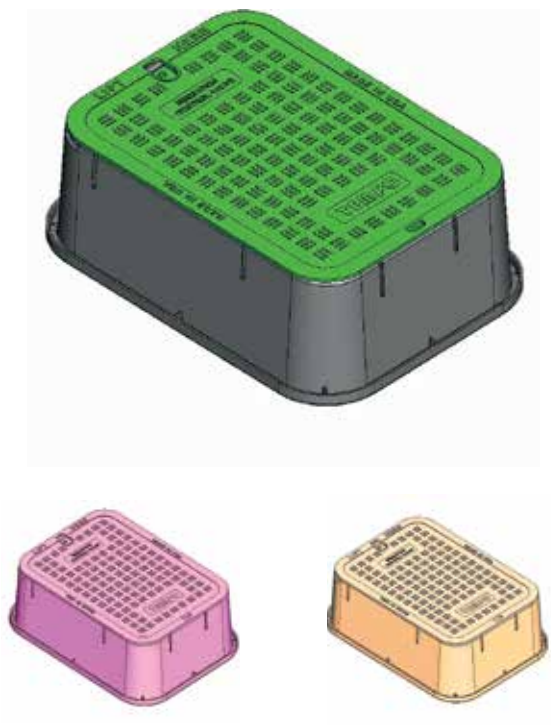

A robust jumbo low profile valve box with snap-in lid. Ideal for shallow pipe and valve installations with a height of 7” (compared to a normal box height of 12.75”). Used as a durable enclosure to protect and provide easy access to valves or subsurface components of an irrigation system. Has overlapping lid to prevent dirt and grass from lodging between lid and body.

Features:

- Available in green, black, sand and purple.
- Secure snap-in, skid resistant lid.
- Recessed corners on valve box for easy removal of lid.
- Can be used with jumbo valve box as a riser.
- Lockable lid option to prevent vandalism.
- Extra ribs for additional side wall support.
- Bottom flange to prevent sinking.
- “ICV” or “Reclaimed Water” marking.
- Overlapping lid prevents dirt and grass entering box.
- Manufactured from structurally foamed HDPE.
- Contains UV inhibitors to prevent discoloration.
- Made in USA.

		Color		Dimensions				
Part No.	Description	Lid	Base	Outside Top	Inside Bottom	Height	Weight	Lockable Option
VBJLPGB	Jumbo Low Profile Valve Box (ICV)	Green	Black	15.0” x 21.0”	15.5” x 21.5”	7.00”	7.5 lbs	Yes
VBJLPPP	Jumbo Low Profile Valve Box (Reclaimed Water)	Purple	Purple	15.0” x 21.0”	15.5” x 21.5”	7.00”	7.5 lbs	Yes
VBJLPSS	Jumbo Low Profile Valve Box (ICV)	Sand	Sand	15.0” x 21.0”	15.5” x 21.5”	7.00”	7.5 lbs	Yes
VLR1724G	17” x 24” Rectangular Replacement Lid (ICV)	Green	N/A	N/A	N/A	N/A	3.00 lbs	Yes
VLR1724P	17” x 24” Rectangular Replacement Lid (Reclaimed Water)	Purple	N/A	N/A	N/A	N/A	3.00 lbs	Yes
VLR1724S	17” x 24” Rectangular Replacement Lid (ICV)	Sand	N/A	N/A	N/A	N/A	3.00 lbs	Yes
VBA	3/8” x 2” SS Bolt Assembly to bolt down 10”, 14” x 19” and 17” x 24” Valve Boxes	N/A	N/A	N/A	N/A	N/A	N/A	N/A

Jumbo Valve Box Riser Extender

A robust jumbo valve box riser extender can be used to increase the height of a jumbo valve box by 5” when stacked together. Accepts jumbo valve box snap-in lid. Multiple riser extenders can be stacked on top of each other to increase height by 5” per extender. Can also be used as a jumbo low profile box when combined with jumbo lid.

Features:

- Available in black, sand and purple.
- Accepts secure snap-in, skid resistant lid.
- Recessed corners on valve box for easy removal of lid.
- Lockable lid option to prevent vandalism.
- Extra ribs for additional side wall support.
- Bottom flange to prevent sinking.
- Manufactured from structurally foamed HDPE.
- Contains UV inhibitors to prevent discoloration.
- Made in USA.

			Dimensions				
Part No.	Description	Color	Outside Top	Inside Bottom	Height	Weight	Lockable Option
VBJRB	Jumbo Valve Box Riser Extender	Black	15.0” x 21.0”	15.5” x 21.5”	6.75”	4.25 lbs	Yes
VBJRP	Jumbo Valve Box Riser Extender	Purple	15.0” x 21.0”	15.5” x 21.5”	6.75”	4.25 lbs	Yes
VBJRS	Jumbo Valve Box Riser Extender	Sand	15.0” x 21.0”	15.5” x 21.5”	6.75”	4.25 lbs	Yes
VLR1724G	17” x 24” Rectangular Replacement Lid (ICV)	Green	N/A	N/A	N/A	3.00 lbs	Yes
VLR1724P	17” x 24” Rectangular Replacement Lid (Reclaimed Water)	Purple	N/A	N/A	N/A	3.00 lbs	Yes
VLR1724S	17” x 24” Rectangular Replacement Lid (ICV)	Sand	N/A	N/A	N/A	3.00 lbs	Yes
VBA	3/8” x 2” SS Bolt Assembly to bolt down 10”, 14” x 19” and 17” x 24” Valve Boxes	N/A	N/A	N/A	N/A	N/A	N/A

BARBED, THREADED AND DUAL HEAD FOGGERS

Features

- Operating range from 35 to 75 psi.
- Can be taken apart for easy cleaning.
- Manufactured from durable engineering grade plastics.
- Vortex design to produce fine mist.
- Excellent droplet size uniformity.
- Inlcudes O-ring for tight leak proof seal.
- Color coded for easy flow rate identification.
- UV stabilized.
- Made in USA.

Technical

- Average droplet size of 70 microns.
- Recommended filtration of 200 mesh.
- Use with 1/4” Poly tubing (0.160” ID for threaded version or 0.170” ID for barbed version).
- Barbed version also clips directly into 1/2” or 3/4” Poly tubing.

Part No.	Color	Inlet	Nozzle	Cone Angle	Flow (gph)	Coverage Diameter
				@45 psi		
EFB20	Grey	1/4” Barb	0.020”	65°	1.5	18”
EFB25	Black	1/4” Barb	0.025”	75°	2.0	24”
EFB35	Tan	1/4” Barb	0.035”	85°	3.0	30”
EFT20	Grey	1/4” Thread	0.020”	65°	1.5	18”
EFT25	Black	1/4” Thread	0.025”	75°	2.0	24”
EFT35	Tan	1/4” Thread	0.035”	85°	3.0	30”
EFD20	Grey	1/4” Barb	0.020”	65°	1.5	18”
EFD25	Black	1/4” Barb	0.025”	75°	2.0	24”
EFD35	Tan	1/4” Barb	0.035”	85°	3.0	30”

DISCHARGE RATES PER HEAD (GPH)

Part No.	35 psi	45 psi	55 psi	65 psi	75 psi
EFB20/EFT20/EFD20	1.20 gph	1.50 gph	1.70 gph	1.90 gph	2.00 gph
EFB25/EFT25/EFD25	1.60 gph	2.00 gph	2.20 gph	2.40 gph	2.50 gph
EFB35/EFT35/EFD35	2.50 gph	3.00 gph	3.30 gph	3.60 gph	3.80 gph

MAX LENGTH OF RUN (FEET / # OF FOGGER HEADS)

Nozzle Size	0.020”			0.025”			0.035”		
Spacing	12”	15”	18”	16”	20”	24”	18”	24”	30”
0.600” ID Tubing	140’/140	160’/128	180’/120	133’/100	150’/90	170’/85	120’/80	140’/70	160’/64
0.820” ID Tubing	240’/240	270’/215	300’/200	240’/180	265’/160	285’/142	200’/133	240’/120	285’/114

Note: Assumes an initial pressure of 50 psi and ending pressure of 45 psi.

DOWN FAN SPRAY JET

- Operating range from 20 to 40 psi.
- 360° gentle downward spray.
- Narrow cone angle of 90°.
- Built in shut off feature.
- Quick twist thread for fast installation.
- Available also as an assembly (jet, stake and tubing).
- Uses 0.150” ID x 0.220” OD tubing.
- UV stabilized.

Part No.	Color	Nozzle	Pressure (psi)	Flow (gph)	Coverage Diameter
EJDS32	Black	0.032”	20	7.2	20”
			30	8.7	20”
			40	10.1	20”
EJDS35	Brown	0.035”	20	8.3	20”
			30	10.2	20”
			40	11.6	20”
EJDS39	Blue	0.039”	20	10.4	20”
			30	12.8	20”
			40	14.6	20”

Coverage diameter depends upon exact mounting height.

BENT DRIP STICK

- Designed to water potted plants.
- Standard drip stick is 6” long and is used for larger pots.
- Short drip stick is 4” long and is used for smaller pots.
- Built-in filtration.
- Can be used with PC drip emitter to control flow rates.
- Used with various manifold options.
- Available as a full assembly (drip stick, manifolds and tubing).
- Tubing size is 3 mm (0.120”) ID x 5 mm (0.195”) OD.
- White tubing is recommended.
- Each drip stick flow rate can be calculated by dividing the controlling PC emitter flow rate by the number of drip sticks it is connected to.
- Recommended operating pressure range from 10 to 40 psi.

Required Drip Stick Flow Rate	Manifold Number of Outlets	PC Drip Emitter to Use
0.25 gph	2	0.5 gph
	4	1.0 gph
	8	2.0 gph
0.50 gph	2	1.0 gph
	4	2.0 gph

Use Tempo ERC5/10/20 or Netafim Woodpecker or equal PC drip emitter.

MAX LENGTH OF RUN (FEET)

2.0 gph PC Drip Emitter Spacing	0.600” ID Tubing	0.840” ID Tubing
6”	120’	200’
12”	180’	330’
18”	250’	440’
24”	300’	550’

Note: Assumes 40 psi inlet pressure and no elevation change.

AGRIJET™ MICRO-SPRINKLERS

- Operating range from 10 to 30 psi.
- No moving parts.
- Quick twist thread for fast installation.
- Color coded nozzles for flow rate identification.
- Wide range of flow rates available.
- Open frame design to minimize bugs effecting spray patterns.
- Deflector cap available for reducing diameter.

Pattern / Code				A	B	C	E	J
Coverage # of Streams				360° 12 Streams	Butterfly 8 Streams	180°+ 8 Streams	360° 22 Streams	360° 16 Streams
Trajectory				High 25° / Low 5°	High 25°	Standard 15°	Standard 15°	Standard 15°
Base Color	Nozzle Size	Pressure (psi)	Flow (gph)	Diameter (ft) High / Low	Diameter (feet)	Diameter (feet)	Diameter (feet)	Diameter (feet)
Black	0.030”	10	4.4	10 / 9	11	11	10	8
		15	5.2	12 / 10	12	12	11	9
		20	5.9	14 / 10	13	13	12	9
		25	6.6	14 / 11	14	14	13	10
		30	7.2	15 /11	15	15	14	10
Orange	0.035”	10	6.0	14 / 10	15	14	11	9
		15	7.2	16 / 12	16	16	12	10
		20	8.3	17 / 13	18	18	14	11
		25	9.3	18 / 14	19	19	15	12
		30	10.2	19 / 15	20	20	16	12
Blue	0.040”	10	7.5	15 / 11	16	16	12	10
		15	9.1	17 / 13	18	18	13	11
		20	10.6	19 / 15	20	20	15	12
		25	11.9	21 / 17	22	22	16	13
		30	13.1	22 / 18	23	23	17	14
Violet	0.045”	10	10.0	17 / 13	17	18	14	12
		15	12.0	20 / 15	19	20	15	13
		20	13.9	22 / 17	21	22	16	14
		25	15.7	24 / 19	23	24	17	15
		30	17.4	26 / 21	25	26	18	15
Green	0.050”	10	11.8	20 / 14	18	19	14	14
		15	14.1	23 / 17	20	21	15	15
		20	16.3	25 / 19	22	23	17	16
		25	18.2	27 / 21	24	26	19	17
		30	20.2	29 / 23	26	28	21	18

Coverage diameter depends upon exact mounting height.

PC DRIPPERLINE w/ CHECK VALVE

- Pressure compensating between 10 and 50 psi.
- Check valve opens at low pressure of 7.5 psi.
- Includes check valve that closes at approximately 2 psi to prevent drainage of line on shut down.
- Anti-syphon feature to prevent dirt from being sucked back if a vacuum occurs.
- Consistent clog free performance.
- 2 flow rates available.
- Wide variety of spacings available.
- Long lasting silicone diaphragm.

DISCHARGE RATES (GPH)

Dripperline Flow Rate	10 psi	20 psi	30 psi	40 psi	50 psi
0.6 gph	0.63 gph	0.64 gph	0.64 gph	0.65 gph	0.64 gph
1.0 gph	0.99 gph	1.00 gph	1.01 gph	1.02 gph	1.03 gph

MAX LENGTH OF RUN (FEET)

Dripperline Dimensions	Starting Line Pressure	0.6 gph			1.0 gph		
		12" Spacing	18" Spacing	24" Spacing	12" Spacing	18" Spacing	24" Spacing
0.560" ID x 0.660" OD (17 mm Brown)	20 psi	265'	400'	490'	200'	260'	350'
	30 psi	337'	475'	595'	240'	340'	425'
	40 psi	410'	550'	700'	280'	420'	500'
0.600" ID x 0.700" OD (18 mm Black)	20 psi	330'	440'	570'	240'	320'	400'
	30 psi	410'	555'	685'	285'	395'	480'
	40 psi	490'	670'	800'	330'	470'	560'

POLYETHYLENE SUPPLY TUBING

- Blend of LLDPE and MDPE for increased strength.
- Minimum of 2.5% carbon black for UV protection.

FRICTION LOSS (psi/100 feet)

Flow	Part Number					
	TSR (0.490" ID)	T620 (0.520" ID)	T700 (0.600" ID)	T710 (0.620" ID)	T830 (0.720" ID)	T940 (0.830" ID)
0.5 gpm	0.4	0.3	0.2	0.1	0.1	0.1
1.0 gpm	1.3	1.2	0.6	0.5	0.1	0.1
1.5 gpm	2.5	2.3	1.1	1.1	0.2	0.2
2.0 gpm	4.9	4.6	2.0	1.6	0.8	0.4
2.5 gpm	7.8	6.0	2.9	2.4	1.1	0.7
3.0 gpm	11.4	10.0	5.0	4.0	1.6	1.0
4.0 gpm			8.5	7.0	2.7	1.7
5.0 gpm				9.8	4.1	2.7
6.0 gpm					5.8	3.8
7.0 gpm					7.7	5.2
8.0 gpm					9.9	6.6
9.0 gpm						8.3
10.0 gpm						10.1

FLEX PVC IPS HOSE

- Manufactured from premium flex PVC compound.
- High resistance to kinking.
- Can be solvent welded to PVC fittings.

FRICTION LOSS (psi/100 feet)

Flow	Part Number
	TIPS50 (0.546" ID)
0.5 gpm	0.3
1.0 gpm	1.0
1.5 gpm	2.0
2.0 gpm	3.5
2.5 gpm	5.2
3.0 gpm	7.0
4.0 gpm	11.0

RHINO™ COMPENSATING EMITTER

- Pressure compensating from 10 to 50 psi.
- Designed with internal check valve to minimize water waste and prevent dirt suck back.
- Turbulent flow path to minimize clogging.
- Self-piercing barb -- no need to pre-punch tubing.

DISCHARGE RATES (GPH)

Part No.	10 psi	20 psi	30 psi	50 psi
ERC5/BL	0.50 gph	0.60 gph	0.60 gph	0.50 gph
ERC10	0.90 gph	1.10 gph	1.10 gph	1.05 gph
ERC20/DR	1.80 gph	2.20 gph	2.20 gph	1.90 gph

TAKE APART PC EMITTER

- Pressure compensating from 10 to 50 psi.
- Can be unscrewed and taken apart for easy cleaning.
- Turbulent flow path to minimize clogging.
- Silicon diaphragm for long life.

DISCHARGE RATES (GPH)

Part No.	10 psi	20 psi	30 psi	50 psi
ETAPC5	0.45 gph	0.50 gph	0.55 gph	0.55 gph
ETAPC10	1.05 gph	1.20 gph	1.25 gph	1.25 gph
ETAPC20	1.70 gph	2.00 gph	2.20 gph	2.30 gph

ANTEATER™ ADJUSTABLE JET

- Operating range from 15 to 40 psi.
- Rotating valve handle adjusts flow from 7 to 26 gph and throw from 2 to 10 feet.
- Can be shut off when not in use.
- 10-32 NFT inlet can be directly screwed on to riser or adapter for jets.

DISCHARGE RATES (GPH)

Radius (feet)	EAJ90	EAJ180	EAJ360
2 ft	10 gph	8 gph	7 gph
3 ft	12 gph	10 gph	9 gph
4 ft	14 gph	12 gph	11 gph
5 ft	16 gph	14 gph	13 gph
6 ft	18 gph	16 gph	15 gph
7 ft	20 gph	18 gph	17 gph
8 ft	22 gph	20 gph	19 gph
9 ft	24 gph	22 gph	21 gph
10 ft	26 gph	24 gph	23 gph

SINGLE PIECE JET

- Operating range from 20 to 30 psi.
- 10-32 NFT inlet can be directly screwed on to riser or adapter for jets.
- Winged design for easy hand installation without additional tools.

DISCHARGE RATES (GPH)

Part No.	Flow Pattern	20 psi		30 psi	
		Discharge	Radius	Discharge	Radius
EJ436		10 gph	4.0’	13 gph	5.0’
EJ536		16 gph	4.5’	20 gph	5.5’
EJ636		23 gph	5.0’	29 gph	6.0’
EJ418		10 gph	5.0’	13 gph	6.0’
EJ518		16 gph	5.5’	20 gph	6.5’
EJ618		23 gph	6.0’	29 gph	7.0’
EJ49		10 gph	6.0’	13 gph	7.5’
EJ59		16 gph	7.0’	20 gph	8.0’
EJ69		23 gph	7.5’	29 gph	8.5’

TAKE APART FLAG EMITTER

- Operating range from 15 to 40 psi.
- Can be taken apart for easy cleaning.
- C-LOK™ design to prevent emitter from blowing apart.

DISCHARGE RATES (GPH)

Part No.	15 psi	25 psi	40 psi
ETA10	1.3 gph	1.7 gph	2.2 gph
ETA20G/B	2.0 gph	2.6 gph	3.4 gph
ETA40Y/G	4.0 gph	5.2 gph	6.8 gph

CYCLONE™ (VORTEX STYLE) EMITTER

- Drip Mode: Operating range from 15 to 40 psi.
- Spray Mode: Operating range from 30 to 40 psi.
- 1 gph drip mode only. 2 and 4 gph drip or spray mode.
- Can be taken apart for easy cleaning.
- Either side plugs can be used for shut off.
- 1/8” barbed inlet.

DISCHARGE RATES (GPH)

Part No.	15 psi	20 psi	30 psi (drip / spray)	40 psi (drip/spray)
EV10	1.2	1.4	1.8 / NA	2.1 / NA
EV20	1.8	2.0	2.4 / 4.0	3.0 / 5.0
EV40	3.0	3.7	4.5 / 8.0	5.5 / 10.0

ZEBRA™ 360° ADJUSTABLE STREAM EMITTERS (EZB360, EZT360, EZS360)

No. of Clicks	15 psi		20 psi		30 psi	
	Discharge	Diameter	Discharge	Diameter	Discharge	Diameter
2	4.0 gph	0”	5.5 gph	6”	6.0 gph	8”
4	6.5 gph	7”	8.0 gph	10”	10.0 gph	16”
6	7.5 gph	10”	9.0 gph	13”	11.0 gph	18”
8	8.5 gph	12”	10.0 gph	16”	12.0 gph	20”
10	9.0 gph	14”	11.0 gph	18”	13.0 gph	22”
12	9.5 gph	15”	12.0 gph	20”	14.0 gph	24”
14	10.0 gph	16”	12.5 gph	22”	15.0 gph	26”

ZEBRA™ 180° ADJUSTABLE STREAM EMITTERS (EZB180, EZT180, EZS180)

No. of Clicks	15 psi		20 psi		30 psi	
	Discharge	Radius	Discharge	Radius	Discharge	Radius
2	5.0 gph	8”	6.5 gph	11”	7.5 gph	14”
4	7.5 gph	15”	10.0 gph	19”	12.0 gph	24”
6	9.0 gph	20”	12.0 gph	25”	14.0 gph	31”
8	10.0 gph	24”	13.0 gph	29”	15.5 gph	35”
10	11.0 gph	27”	14.0 gph	32”	17.0 gph	38”
12	12.0 gph	28”	15.0 gph	34”	18.0 gph	40”
14	13.0 gph	29”	16.0 gph	35”	19.0 gph	42”

ZEBRA™ ADJUSTABLE FAN SPRAYERS (EZBFAN, EZTFAN, EZSFAN)

No. of Clicks	20 psi		30 psi		40 psi	
	Discharge	Diameter	Discharge	Diameter	Discharge	Diameter
2	5.0 gph	6”	6.0 gph	12”	7.5 gph	30”
4	7.0 gph	18”	9.0 gph	30”	10.5 gph	66”
6	9.0 gph	36”	11.5 gph	48”	13.5 gph	96”
8	10.5 gph	54”	13.5 gph	78”	16.0 gph	114”
10	12.0 gph	72”	15.0 gph	96”	18.0 gph	126”
12	13.0 gph	84”	16.5 gph	108”	19.5 gph	132”

ZEBRA™ ADJUSTABLE BUBBLERS (EZBBUB, EZTBUB, EZSBUB)

No. of Clicks	15 psi		20 psi		30 psi	
	Discharge	Diameter	Discharge	Diameter	Discharge	Diameter
2	4.0 gph	0”	5.0 gph	0”	7.0 gph	0”
4	7.0 gph	0”	9.0 gph	0”	11.0 gph	0”
6	10.0 gph	0”	13.0 gph	0”	15.0 gph	0”
8	13.0 gph	0”	17.0 gph	4”	19.0 gph	6”
10	16.0 gph	4”	20.0 gph	6”	23.0 gph	9”
12	19.0 gph	6”	23.0 gph	9”	27.0 gph	13”
14	22.0 gph	9”	27.0 gph	13”	31.0 gph	18”

*Diameter/radius rated at 8” above ground level.

SPRAY STICKS

- Operating range from 15 to 25 psi.
- Bottom can be used as shut off.
- Fits 1/8” tubing (0.125” ID x 0.185” OD).

DISCHARGE RATES (GPH)

Part No.	Spray Pattern	15 psi			25 psi		
		Discharge Rates (GPH)	Max # of Spray Sticks		Discharge Rates (GPH)	Max # of Spray Sticks	
			0.600” ID Tubing	0.820” ID Tubing		0.600” ID Tubing	0.820” ID Tubing
ESS360	360°	10.8 gph	23	46	15.0 gph	17	33
ESS160BL	160°	12.6 gph	20	40	17.4 gph	15	29
ESS160DG	160°	9.6 gph	27	52	13.2 gph	19	38
ESS160AV	160°	5.4 gph	48	93	7.2 gph	36	70
ESS160TC	160°	3.6 gph	73	140	4.8 gph	54	105
ESS90BR	90°	5.4 gph	48	93	7.8 gph	33	64
ESS90C	90°	2.4 gph	110	211	3.6 gph	73	140

1/8” MIPT THREADED MISTERS

- Minimum operating pressure of 30 psi.
- Droplets in the 30 to 80 micron range.
- Includes 100 mesh stainless steel screen.

DISCHARGE RATES (GPH)

Part No.	Cone Angle	30 psi	45 psi	60 psi	75 psi	90 psi
EM6	80°	0.65 gph	0.80 gph	0.90 gph	1.00 gph	1.10 gph
EM10	80°	0.90 gph	1.10 gph	1.30 gph	1.40 gph	1.50 gph

BARBED ELBOW FOGGER

- Minimum operating pressure of 30 psi.
- Cone angle of 30° at 45 psi.

DISCHARGE RATES (GPH)

Part No.	30 psi	45 psi	60 psi
EMB30	3.50 gph	4.20 gph	5.20 gph

MINI-INLINE EMITTERS

- Minimum operating pressure of 10 psi.
- Turbulent flow path to minimize clogging.
- Use with 0.170” ID x 0.250” OD tubing.
- Flow can go through emitter in either direction.

DISCHARGE RATES (GPH)

Part No.	Max # Allowed*	15 psi	20 psi	30 psi
EMIL5	30 emitters	0.60 gph	0.70 gph	0.90 gph
EMIL10	15 emitters	0.90 gph	1.05 gph	1.35 gph
EMIL20	10 emitters	1.40 gph	1.60 gph	2.10 gph

*Based on average of 12” spacing between emitters.

4 OUTLET PRESSURE COMPENSATING BUBBLERS

- Pressure compensating from 20 to 60 psi.
- Built-in filter slots to minimize clogging.
- Fits 1/4” tubing (0.170” ID x 0.250” OD).
- 1/2” FIPT inlet.

DISCHARGE RATES / OUTLET (GPH)

Part No.	20 psi	30 psi	45 psi	60 psi
EPCB2	1.8 gph	2.0 gph	2.4 gph	2.6 gph
EPCB6	5.2 gph	6.2 gph	7.8 gph	8.5 gph
EPCB10	8.0 gph	9.3 gph	11.6 gph	13.0 gph
EPCB20	14.0 gph	18.0 gph	21.0 gph	23.0 gph

1/4” COBRA™ DRIPPERLINE

- Operating range from 15 to 30 psi.
- Turbulent flow path to minimize clogging.
- Fits all 1/4” barbed fittings (0.170” x 0.250” tubing).

DISCHARGE RATES (GPH)

15 psi	20 psi	30 psi
0.3 gph	0.4 gph	0.5 gph

Spacing	Max Length of Run
6”	18’
9”	25’
12”	32’

ADJUSTABLE MICRO-SPRINKLER

- Operating range from 15 to 40 psi.
- Max flow of 25 gph at 40 psi.
- Rotating valve handle adjusts throw from 7 to 11 feet.
- Can be shut off when not in use.
- 10-32 NFT inlet can be directly screwed on to riser or adapter for jets.

Pressure	15 psi	20 psi	40 psi
Radius (feet)	7’	9’	11’

8 OUTLET ADJUSTABLE BUBBLER

- Shut off capability.
- Maximum pressure allowed of 45 psi.
- 1/4” barbed elbows.
- Valve adjustment tool included.
- Built-in filter slots to minimize clogging.
- Fits 1/4” tubing (0.170” ID x 0.250” OD).
- 1/2” FIPT swivel inlet.

MAX DISCHARGE RATE / OUTLET (GPH)

Part No.	20 psi	30 psi	45 psi
EAB8	32 gph	40 gph	54 gph

POLYETHYLENE / VINYL DISTRIBUTION TUBING

FRICTION LOSS (psi/100 feet)

Flow	Part Number		
	T185/V	T220/V	T250/V
3 gph	5.9	1.7	1.3
6 gph	19.7	5.8	4.3
9 gph	41.5	12.2	9.1
12 gph		20.9	15.6
15 gph		31.7	23.9
18 gph		43.9	33.0
21 gph			44.3

Index

Part No.	Page
ABA34	9
ABA6	9
ABAO34	9
ABP	9
ABR12	9
ABR9	9
ADS23	8
ADS34	8
AFA34	9
APU	6
APU3	6
APU4	6
APUP34	6
BR61	7
BR62	7
BS120	8
BS122	7
BS124	7
BS12LP	8
BS182	7
BS184	7
BS92	7
BS94	7
BS9LP	8
CD404C	2
CD404S	2
CD404B	2
CD404G	2
CD408C	2
CD408S	2
CD408B	2
CD408G	2
CG40C	2
CG40S	2
CG40B	2
CG40G	2
CC40	2
CEP40	2
CA40	2
CKF40C	2
CKF40S	2
CKF40B	2
CKF40G	2
CD254C	1
CD254S	1
CD254B	1
CD254G	1
CD258C	1
CD258S	1
CD258B	1
CD258G	1
CG25B	1
CG25C	1
CG25G	1
CG25S	1

Part No.	Page
CC25	1
CEP25	1
CA25	1
CKF25C	1
CKF25S	1
CKF25B	1
CKF25G	1
EAB8	19
EADS4-1818	15
EADS4-1830	15
EADS4-2424	15
EADS6-1818	15
EADS6-1830	15
EADS6-24	15
EADS6-2424	15
EADS6-2436	15
EADS6-30	15
EADS6-3030	15
EADS6S-1818	15
EADS6S-2424	15
EADS6S-2436	15
EADS6S-3030	15
EAJ180	21
EAJ180/5	63
EAJ360	21
EAJ360/5	63
EAJ90	21
EAJ90/5	63
EAMS	21
EBDS4	14
EBDS6	14
ED12BL/100	25
ED12BL/1000	25
ED12BL/50	25
ED12BL/500	25
ED12BR/100	25
ED17-1012/100	24
ED17-1012/250	24
ED17-1012/500	24
ED17-1018/100	24
ED17-1018/500	24
ED17-612/100	24
ED17-612/500	24
ED17-618/100	24
ED17-618/500	24
ED18-1012/100	24
ED18-1012/500	24
ED18-1018/100	24
ED18-1018/500	24
ED18-612/100	24
ED18-612/500	24
ED18-618/100	24
ED18-618/500	24
ED6BL/100	25
ED6BL/1000	25

Part No.	Page
ED6BL/50	25
ED6BL/500	25
ED6BR/100	25
ED6BR/1000	25
ED6BR/50	25
ED6BR/500	25
ED9BL/100	25
EFB20	23
EFB25	23
EFB35	23
EFD20	23
EFD25	23
EFD35	23
EFT20	23
EFT25	23
EFT35	23
EJ30A	16
EJ30B	16
EJ30C	16
EJ30E	16
EJ30J	17
EJ35A	16
EJ35B	16
EJ35C	16
EJ35E	16
EJ35J	17
EJ40A	16
EJ40B	16
EJ40C	16
EJ40E	16
EJ40J	17
EJ418	22
EJ436	22
EJ45A	16
EJ45B	16
EJ45C	16
EJ45E	16
EJ45J	17
EJ49	22
EJ50A	16
EJ50B	16
EJ50C	16
EJ50E	16
EJ50J	17
EJ518	22
EJ536	22
EJ59	22
EJ618	22
EJ636	22
EJ69	22
EJDC	17
EJDS32	13
EJDS32-36	13
EJDS35	13
EJDS35-36	13

Part No.	Page
EJDS39	13
EJDS39-36	13
EM10	23
EM6	23
EMB30	23
EMB30/5	64
EMIL5	19
EMIL10	19
EMIL20	19
EPCB10	19
EPCB10/1	64
EPCB2	19
EPCB6	19
EPCB20	19
EPCB6/1	64
ERC5	18
ERC5/10	63
ERC5BL	18
ERC10	18
ERC10/10	63
ERC20	18
ERC20/10	63
ERC20DR	18
ESS160AV	22
ESS160BL	22
ESS160DG	22
ESS160TC	22
ESS360	22
ESS90BR	22
ESS90C	22
ETA10	18
ETA10/10	63
ETA20B	18
ETA20B/10	63
ETA20G	18
ETA20G/10	63
ETA40G	18
ETA40G/10	63
ETA40Y	18
ETA40Y/10	63
ETAPC5	18
ETAPC10	18
ETAPC20	18
EV10	22
EV20	22
EV40	22
EZB180	20
EZB360	20
EZB360/10	63
EZBBUB	21
EZBFAN	20
EZBFAN/10	63
EZS180	20
EZS360	20
EZS360/5	63

Part No.	Page
EZSBUB	21
EZSFAN	20
EZSFAN/5	63
EZT180	20
EZT360	20
EZTBUB	21
EZTFAN	20
FAJ	55
FBB250HD	30
FBB250HD/500	31
FBDS5	14
FBNC	59
FBP250	30
FBP250/10	64
FBQT250	31
FBT250	31
FBV75	49
FBV75/100	49
FBV75B	49
FBV75S	49
FBV75S/100	49
FBV75SB	49
FBVQL550	47
FBVQL600	47
FBVQL600S	47
FBVQL600SW	47
FBVQL700	47
FBVQL700S	47
FBVQL700SW	47
FBVQL800	47
FBVQL800S	47
FBVQL800SW	47
FBVSS	47
FBVSWM	47
FC125	30
FC250	30
FC250/10	64
FC250/25	64
FC250/500	31
FCA250	32
FCA620	32
FCA700	32
FCA710	32
FCA900	35
FCAP75	62
FCC620	32
FCC620/5	65
FCC700	32
FCC700/5	65
FCC710	32
FCC710/5	65
FCC900	35
FCEL620	32
FCEL620/5	65
FCEL700	32

Part No.	Page
FCEL700/5	65
FCEL710	32
FCEL710/5	65
FCEL900	35
FCEP620	33
FCEP620/5	65
FCEP700	33
FCEP700/5	65
FCEP710	33
FCEP710/5	65
FCEP900	35
FCMAH620	34
FCMAH700	34
FCMAH710	34
FCMAH900	36
FCMAP620	34
FCMAP700	34
FCMAP710	34
FCMAP900	36
FCON50	60
FCON50FM	60
FCON75	60
FCON7550	60
FCSA620	33
FCSA700	33
FCSA710	33
FCSA900	36
FCSAPW620	33
FCSAPW700	33
FCSAPW710	33
FCSAW620	33
FCSAW700	33
FCSAW710	33
FCSAW900	36
FCSL620	34
FCSL700	34
FCSL710	34
FCSLW620	34
FCSLW700	34
FCSLW710	34
FCST620	34
FCST700	34
FCST710	34
FCST900	36
FCSTW620	33
FCSTW700	33
FCSTW710	33
FCSTW900	36
FCT620	32
FCT620/5	65
FCT700	32
FCT700/5	65
FCT710	32
FCT710/5	65
FCT900	36

Part No.	Page
FCURL73	58
FCURL73G	58
FCURL74	58
FCURL74G	58
FCURL84	58
FCURL84G	58
FCURL94	58
FCURL94G	58
FCV620	50
FCV700	50
FCV710	50
FCV900	50
FCVT11	59
FCVT11SF	59
FDZK2071	46
FDZK3071	46
FEL250	30
FEL250/10	64
FEL250/25	64
FF870	62
FF880	62
FF890	62
FFPC	42
FFPMA50	42
FFPMA75	42
FFPML50	42
FFPML75	42
FFPSL50	42
FFPSL75	42
FFPSR1250	43
FFPSR1257	43
FFPSR1275	43
FFPSR650	43
FFPSR657	43
FFPSR675	43
FFPT	42
FFVQL600	48
FFVQL700	48
FFVQL800	48
FFYVQL600	48
FFYVQL700	48
FGP2	30
FGP2/1000	31
FGP2/20	64
FGPT	30
FHA7550	57
FHA7575HD	57
FHAL75	57
FHAT	62
FHAX75	57
FHAXS75	57
FIC17	40
FIC18	41
FIEL17	40
FIEL18	41

Part No.	Page
FILF75	45
FIMA1750	40
FIMA1775	40
FIMA1850	41
FIMA1875	41
FIT17	40
FIT18	41
FITT1750	40
FITT1850	41
FIV17	50
FIV18	50
FIX17	40
FIX18	41
FM4	19
FMA50	54
FMA50-12	55
FMA50-6	55
FMA50-8	55
FMC2	14
FMC250	62
FMC4	14
FMC710	62
FMO4	14
FOR27	45
FOR503	45
FPR15P	46
FPR20H	46
FPR20P	46
FPR25P	46
FPR30H	46
FPR30P	46
FPR40P	46
FPRF100	45
FPRF75	45
FQC3	59
FQC4	59
FQLA550	39
FQLA600	39
FQLA700	39
FQLA800	39
FQLC1000	37
FQLC550	37
FQLC600	37
FQLC700	37
FQLC800	37
FQLEP550	39
FQLEP600	39
FQLEP700	39
FQLEP800	39
FQLL550	37
FQLL600	37
FQLL700	37
FQLL800	37
FQLMAH550	38
FQLMAH600	38

Part No.	Page
FQLMAH700	38
FQLMAH800	38
FQLMAP550	38
FQLMAP550-5	38
FQLMAP600	38
FQLMAP600-5	38
FQLMAP700	38
FQLMAP700-5	38
FQLMAP800	38
FQLMAP800-5	38
FQLSA550	39
FQLSA600	39
FQLSA700	39
FQLSA800	39
FQLSAW550	39
FQLSAW600	39
FQLSAW700	39
FQLSAW800	39
FQLST1000	38
FQLST550-5	37
FQLST600	38
FQLST700	38
FQLST800	38
FQLSTW1000	38
FQLSTW600	38
FQLSTW700	38
FQLSTW800	38
FQLT1000	37
FQLT550	37
FQLT600	37
FQLT700	37
FQLT800	37
FRBA	31
FRC100	61
FRC75	61
FRCC67	32
FRCC671	32
FRCC771	32
FRCC970	35
FRCC971	35
FRCT997	35
FREL250	55
FREL250/5	66
FRRS8	51
FRRS8-12	55
FRRS8-6	55
FRRS8-6/5	66
FRRS8-8	55
FS13	51
FS14	52
FS5075-2	56
FS5075-3	56
FS5075-4	56
FS5075-6	56
FS6	51

Part No.	Page
FS6/10	66
FS7510-2	56
FS7510-3	56
FS7510-4	56
FS7510-6	56
FS9	51
FSA24	53
FSA24-F	53
FSA24-H	53
FSA24-Q	53
FSA24-V	53
FSA700	32
FSDU6	52
FSDU6B	52
FSDU8B	52
FSH18	59
FSH20	59
FSH75	59
FSI12	13
FSJ5	52
FSJ5/10	66
FS4	51
FSJ6	51
FSJ8	52
FSJ8/10	66
FSJ8B	52
FSJL50	42
FSJL75	42
FSJR1250	43
FSJR1257	43
FSJR1275	43
FSJR650	43
FSJR657	43
FSJR675	43
FSP150	45
FSS150	45
FSTT75W	57
FSU4	52
FSU6	52
FSU6B	52
FSU6GB	52
FSU8GB	52
FSW75	62
FSYVQL600	48
FSYVQL700	48
FT125	30
FT250	30
FT250/10	64
FT250/25	64
FTM	23
FTT250	31
FVB250	49
FVB250/5	65
FVT250	49
FW75	62

Part No.	Page
FX250	30
FYBV75	49
FYF100	44
FYF100V	44
FYF75	44
FYF75V	44
FYFH75	44
FYFS100	44
FYFS100V	44
FYFS75	44
FYFS75V	44
G12SAB	4
G12SAG	4
G12SFB	4
G12SFC	4
G12SFG	4
G12SFS	4
G18SFB	4
G18SFC	4
G18SFG	4
G18SFS	4
G3RAB	3
G3RAG	3
G3RAS	3
G3RFB	3
G3RFC	3
G3RFG	3
G3RFP	3
G3RFS	3
G4RAB	3
G4RAG	3
G4RAS	3
G4RFB	3
G4RFC	3
G4RFG	3
G4RFS	3
G6RAB	3
G6RAG	3
G6RAS	3
G6RFB	3
G6RFC	3
G6RFG	3
G6RFS	3
G6SUB	4
G6SUC	4
G6SUG	4
G6SUS	4
G8RFB	5
G8RFG	5
G9SAB	4
G9SAG	4
G9SFB	4
G9SFC	4
G9SFG	4
G9SFS	4

Part No.	Page
G10RFB	5
G10RFG	5
G12RCG	6
G12RFB	5
G12RFG	5
G15RCG	6
G15RFB	5
G15RFG	5
K12B	8
K12G	8
K9B	8
K9G	8
T185/100	28
T185/1000	28
T185/1000W	27
T185/100W	27
T185/2000	28
T185/2000BKT	29
T185/2000S	29
T185V/100	28
T185V/1000	28
T220/100	28
T220/1000	28
T220/2000	28
T220F/1000	13, 28
T220V/100	28
T220V/1000	28
T220V/2000	28
T250/100	28
T250/1000	28
T250/1000BKT	29
T250/1000S	29
T250/1000W	27
T250/100W	27
T250/1500	28
T250/50	28
T250/500	28
T250HWV/100	28
T250V/100	28
T250V/1000	28
T250V/1000BKT	29
T250V/1000S	29
T250V/500	28
T35/1000W	14, 27
T620/100	26
T620/500	26
T700/100	26
T700/1000	26
T700/1000W	27
T700/100W	27
T700/250	26
T700/50	26
T700/500	26
T700/500W	27
T710/100	26

Part No.	Page
T710/500	26
T830/100	26
T830/500	26
T940/100	26
T940/100W	27
T940/250	26
T940/250W	27
T940/500	26
T940/500W	27
TFT24P	50
TFT24-XXY	17
TFT30P	50
TFT30-XXY	17
TFT36P	50
TFT36-XXY	17
TFTDS36	13
TIPS50/100	29
TIPS50/50	29
TR12	54
TR18	54
TR6	54
TR8	54
TRA12-B	54
TRA12-T	54
TRA18-B	54
TRA18-T	54
TRA6-B	54
TRA6-T	54
TRA8-B	54
TRA8-T	54
TSR/100	29
VB1419GB	11
VB1419GG	11
VB1419PP	11
VB1419SS	11
VB1724GB	11
VB1724GG	11
VB1724PP	11
VB1724SS	11
VBA	11, 12
VBJLPGB	12
VBJLPPP	12
VBJLPSS	12
VBJRB	12
VBJRP	12
VBJRS	12
VBR10GB	10
VBR10GG	10
VBR10PP	10
VBR10SS	10
VBR6GB	10
VBR6GG	10
VBR6PP	10
VBR6SS	10
VBSLPGB	12

Part No.	Page
VBSLPGG	12
VBSLPPP	12
VBSLPSS	12
VBSRB	12
VBSRG	12
VBSRP	12
VBSRS	12
VLR10G	10
VLR10P	10
VLR10S	10
VLR1419G	11
VLR1419P	11
VLR1419S	11
VLR1724G	11
VLR1724P	11
VLR1724S	11
VLR6G	10
VLR6P	10
VLR6S	10
ZMP	61
ZP	61
ZPP	61
ZPP/1	66
ZRB	61
ZTC	61

Part No.	Page

Notes

Products manufactured by Tempo Products Inc. are warranted to be free from defects in material and workmanship for a period of one year from date of delivery.

This warranty is expressly conditioned upon the proper installation and application of the product as recommended by Tempo Products Inc.

Within the period of this warranty, Tempo Products Inc. is obliged to repair or replace part or all of product, or to refund a part or all of the original purchase price, if any part proves defective in material or workmanship. The option to repair, replace or pay a refund shall be at the sole discretion of Tempo Products Inc. Misuse, neglect, modification or unauthorized repair shall completely void this warranty.

This warranty constitutes the exclusive warranty made by Tempo Products Inc. for its products and is expressly in lieu of all other warranties, express or implied, including warranty of “merchantability” or “fitness for purpose”.

Tempo Products Inc. will not be liable or responsible for incidental or consequential damage of any nature. Tempo Product Inc.’s sole liability and responsibility shall be for the repair or replacement of defective parts or refund of part or all of the original purchase price therefore pursuant to this warranty.

This warranty is not deemed a consumer warranty and does not extend to anyone else other than those who purchase products from Tempo Products Inc. for resale.

This warranty is only effective if notice of any claim is delivered to the company within 30 days after discovery of any defect. Tempo Product Inc. neither assumes nor authorizes any representative or other person to assume for us any liability in connection with the sale or any shipment of our products.

Authorization must be obtained from the factory before any product may be returned. All authorized returns must be returned freight pre-paid, must be in a clean and salable condition and may be subject to a 20% restocking charge.

Tempo Products Inc.
337 W. Bedford
Fresno, CA 93711

Customer Service
(888) 90-TEMPO
(888) 908-3676

Phone
(559) 435-9500

Fax
(559) 435-9501

Website
www.tempoinc.com